SCHEGLER®

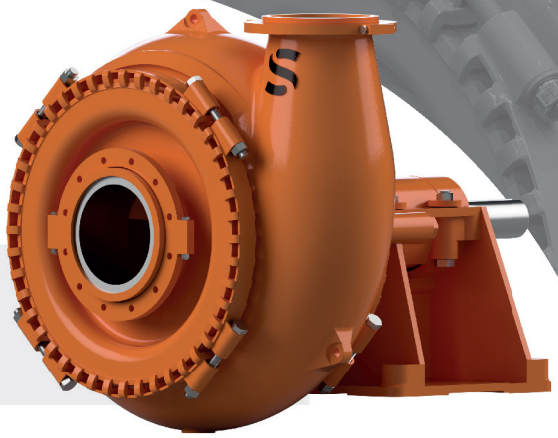

Gravel™

Gr14x12-SA.BE.IH.C4.I3VC.F6.D000-BUCD00

BARESHAFT SPECIFICATIONS

Series	Gravel™
Suction size	14 inch
Discharge size	12 inch
Sealing type	Standard stuffing box
Bearing type	Grease lubricated extra heavy duty bearings
Impeller material	High Chrome (27%) (423)
Liner material	High chrome (27%) - Standard bowl thickness - Door without clamp ring
Impeller shaping	3 vane closed (686)
Frame size	F6
Discharge position	0°
Solid passage	241 mm
Maximum RPM	700 RPM
Maximum motor size	900 kW
Weight (Bareshaft)	5361 kg

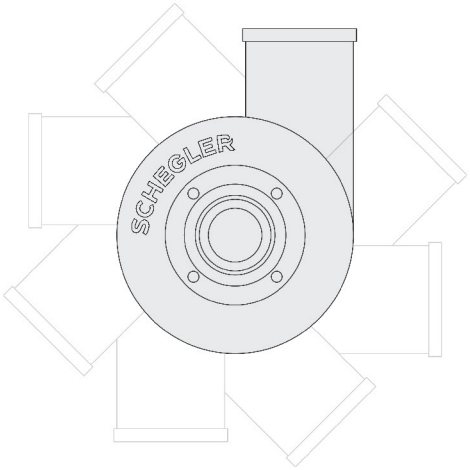

DISCHARGE POSITION

0°

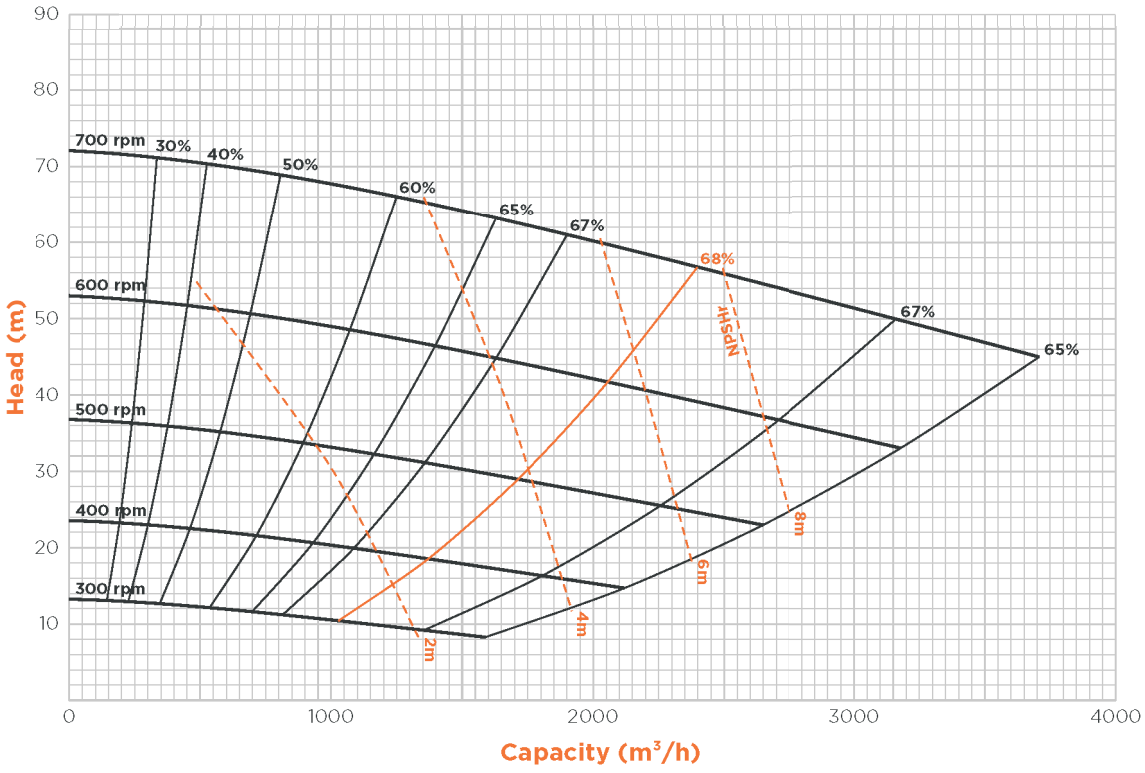

SCHEGLER®

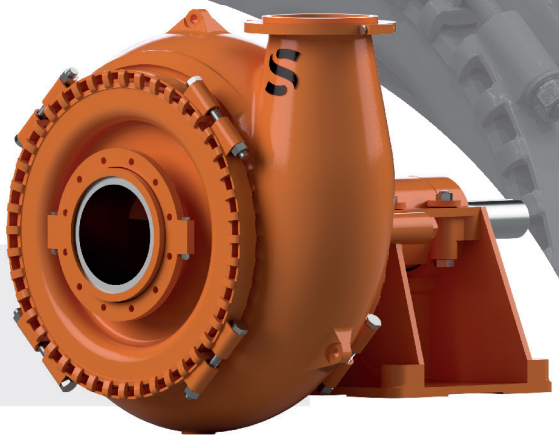

Gravel™

Gr14x12-SA.BE.IH.C4.I3VC.F6.D000-BUCD00

BUILD-UP SPECIFICATIONS

Motor configuration	Direct drive

MOTOR SPECIFICATIONS

Motor type	Customer provides motor
Installed motor power	/
Housing material	/
Energy efficiency	/
Voltage	/
Mounting arrangements	/
Shaft speed	/
Poles	/
Motor frame size	/
Frequency	/

MOTOR CONFIGURATION | DIRECT DRIVE

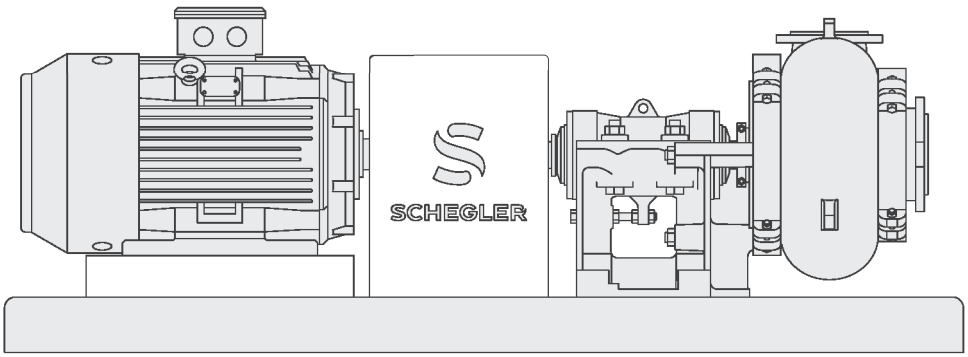

SCHEGLER®

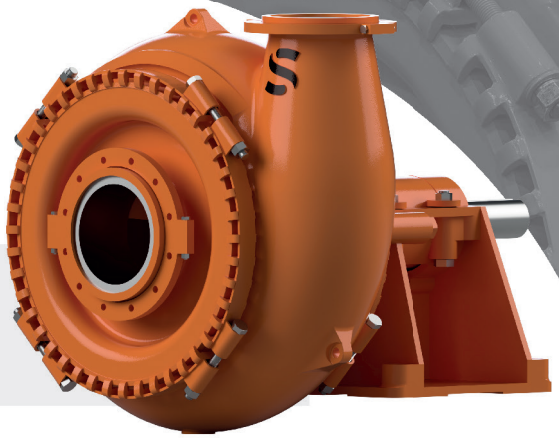

Gravel™

Gr14x12-SA.BE.IH.C4.I3VC.F6.D000-BUCD00

DISCHARGE FLANGE

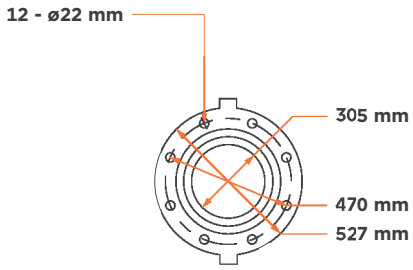

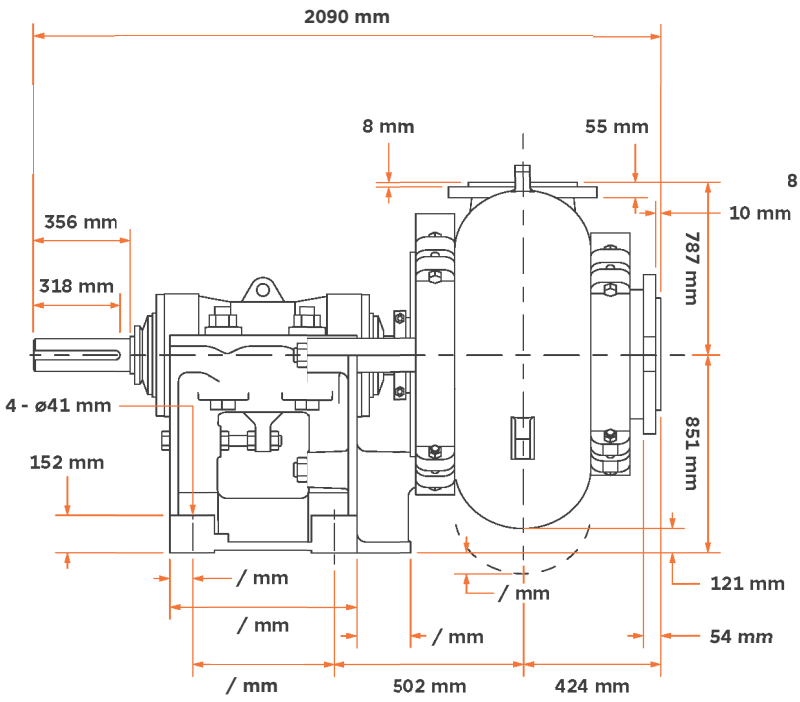

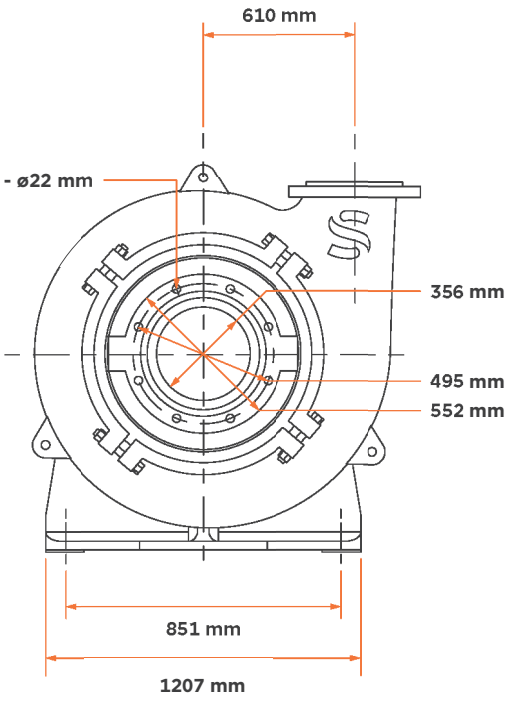

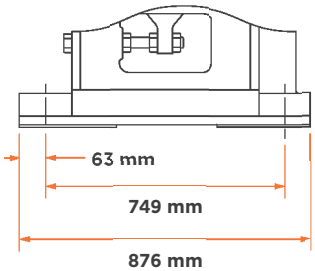

SHAFT

