SCHEGLER®

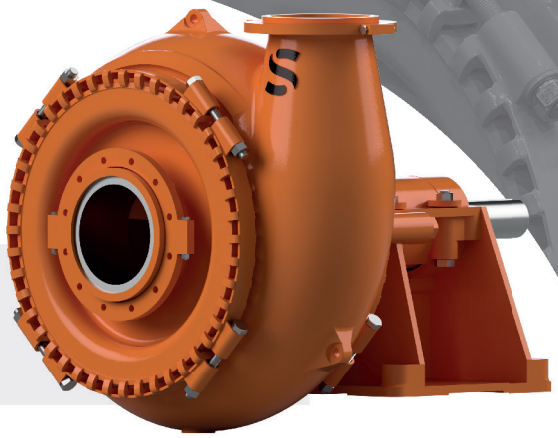

# Gravel™

## Gr6x4-SA.BE.IH.C4.I3VC.F3.D000-BUCD00

## BARESHAFT SPECIFICATIONS

| | |
|---|---|
| **Series** | Gravel™ |
| **Suction size** | 6 inch |
| **Discharge size** | 4 inch |
| **Sealing type** | Standard stuffing box |
| **Bearing type** | Grease lubricated extra heavy duty bearings |
| **Impeller material** | High Chrome (27%) (423) |
| **Liner material** | High chrome (27%) - Standard bowl thickness<br>- Door without clamp ring |
| **Impeller shaping** | 3 vane closed (686) |
| **Frame size** | F3 |
| **Discharge position** | 0° |
| **Solid passage** | 82 mm |
| **Maximum RPM** | 1400 RPM |
| **Maximum motor size** | 110 kW |
| **Weight (Bareshaft)** | 459 kg |

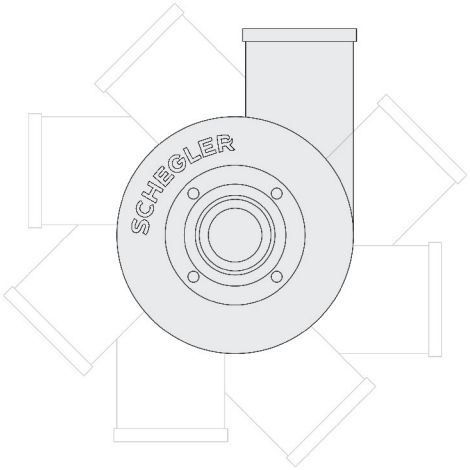


DISCHARGE POSITION

0°

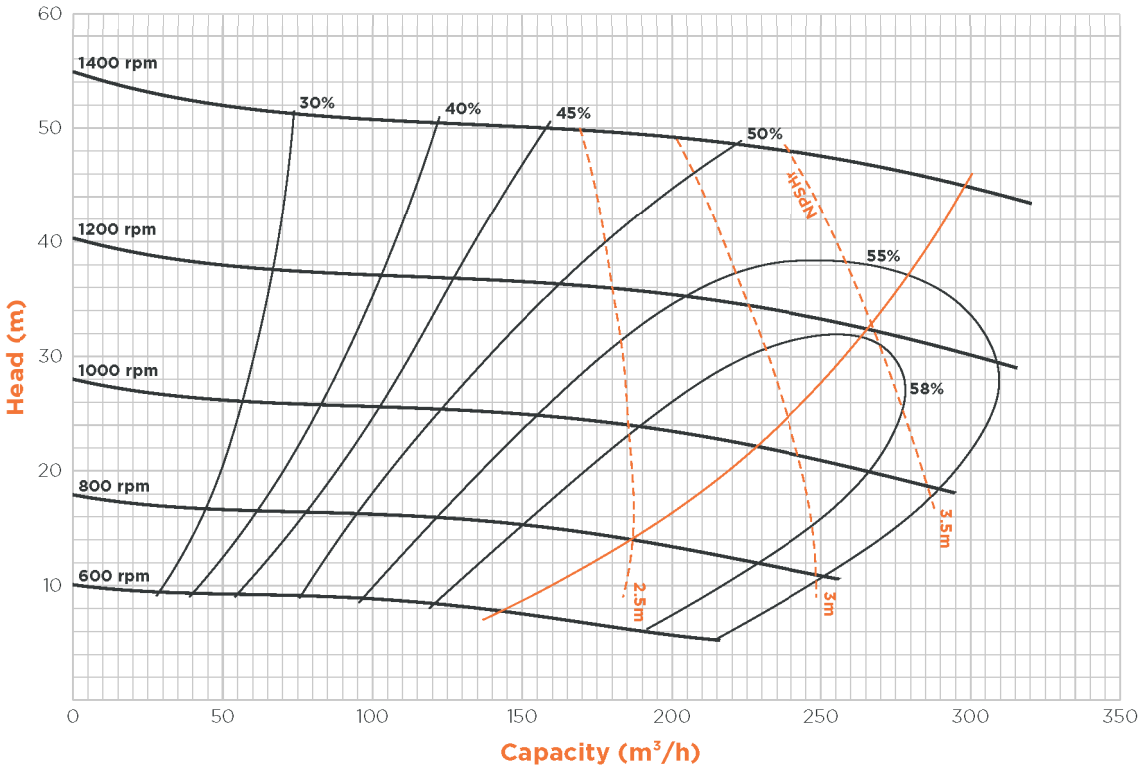

SCHEGLER®

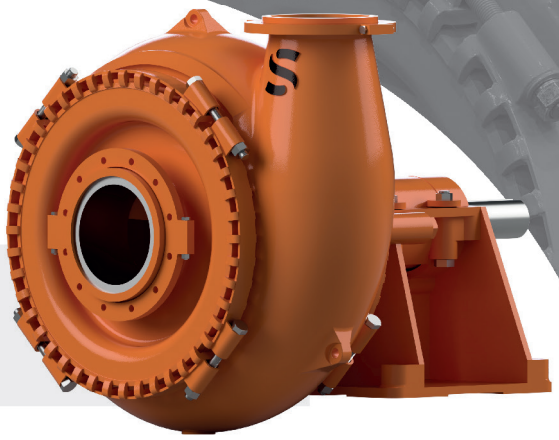

# Gravel™

## Gr6x4-SA.BE.IH.C4.I3VC.F3.D000-BUCD00

## BUILD-UP SPECIFICATIONS

| | |
|---|---|
| **Motor configuration** | Direct drive |

## MOTOR SPECIFICATIONS

| | |
|---|---|
| **Motor type** | Customer provides motor |
| **Installed motor power** | / |
| **Housing material** | / |
| **Energy efficiency** | / |
| **Voltage** | / |
| **Mounting arrangements** | / |
| **Shaft speed** | / |
| **Poles** | / |
| **Motor frame size** | / |
| **Frequency** | / |

**MOTOR CONFIGURATION** | DIRECT DRIVE

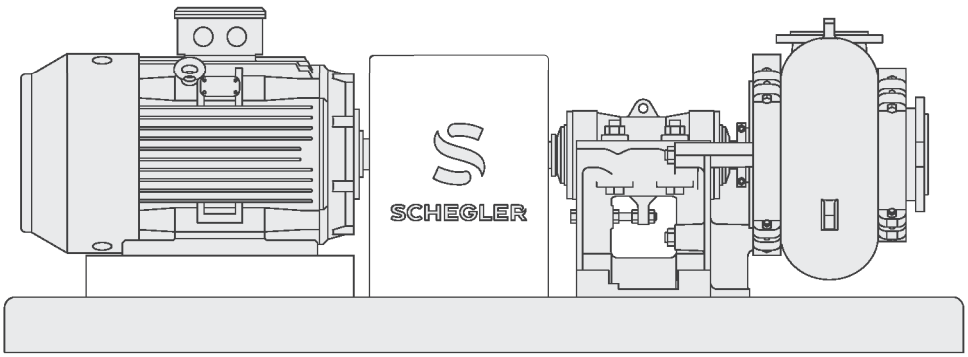

SCHEGLER®

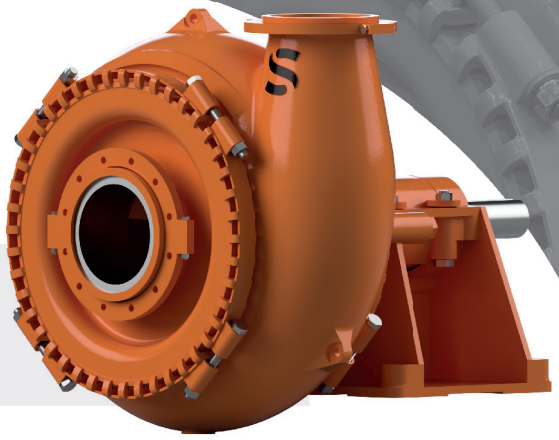

# Gravel™

**Gr6x4-SA.BE.IH.C4.I3VC.F3.D000-BUCD00**

## DISCHARGE FLANGE

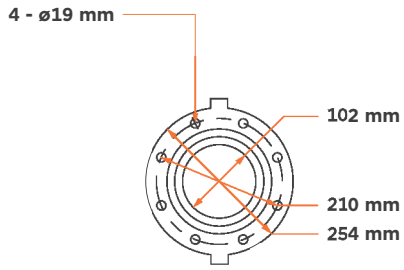


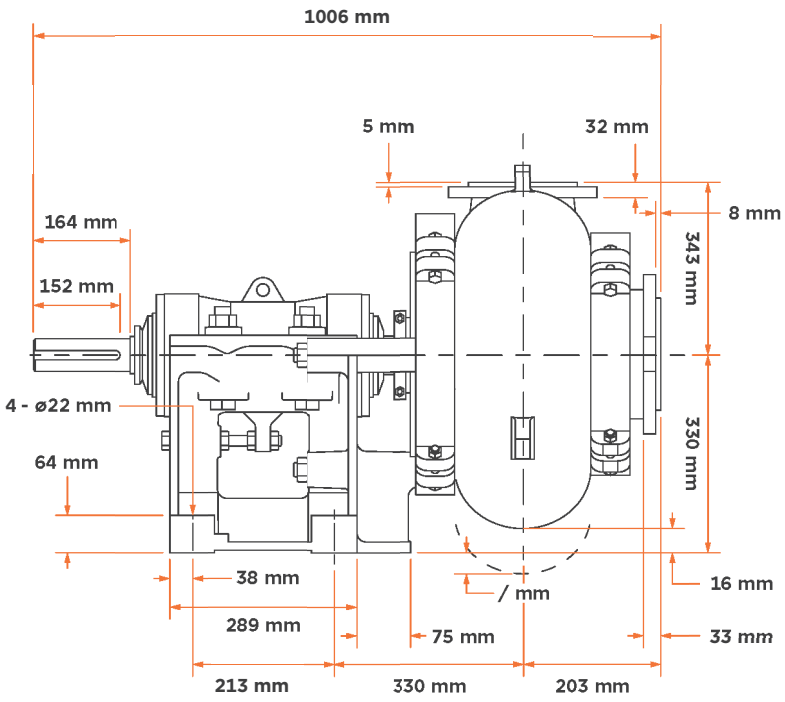


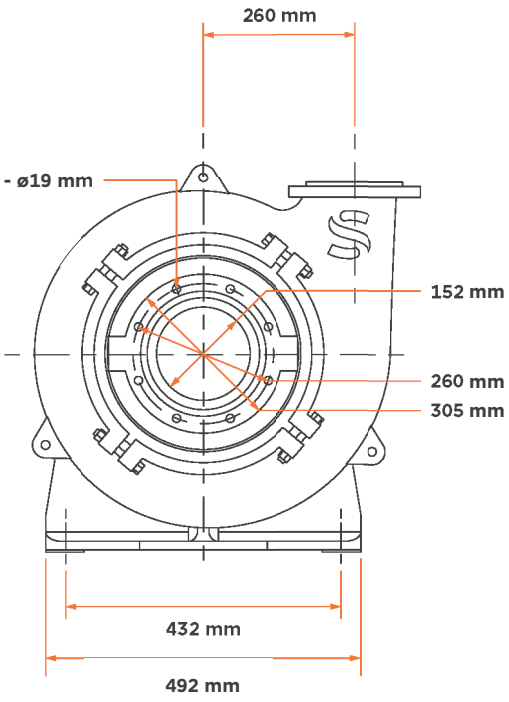


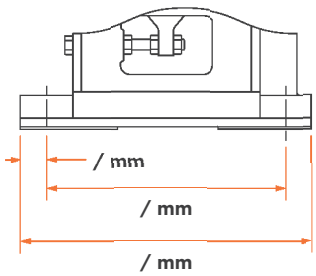


## SHAFT

