# Vigor™

## Vi1.5x1-SB.BH.IR.LR.I3VO.F1.D000-BUCT01

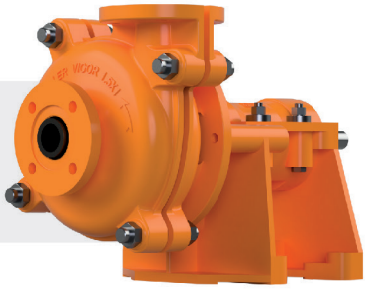

## BARESHAFT SPECIFICATIONS

| | |
|---|---|
| **Series** | Vigor™ |
| **Suction size** | 1.5 inch |
| **Discharge size** | 1 inch |
| **Sealing type** | Standard expeller |
| **Bearing type** | Grease lubricated heavy duty bearing |
| **Impeller material** | Natural rubber (50 Shore hardness) (662) |
| **Liner material** | Natural rubber (50 Shore hardness) (662) |
| **Impeller shaping** | 3 vane open (705) |
| **Frame size** | F1 |
| **Discharge position** | 0° |
| **Solid passage** | 20 mm |
| **Maximum RPM** | 3200 RPM |
| **Maximum motor size** | 15 kW |
| **Weight (Bareshaft)** | 75 kg |

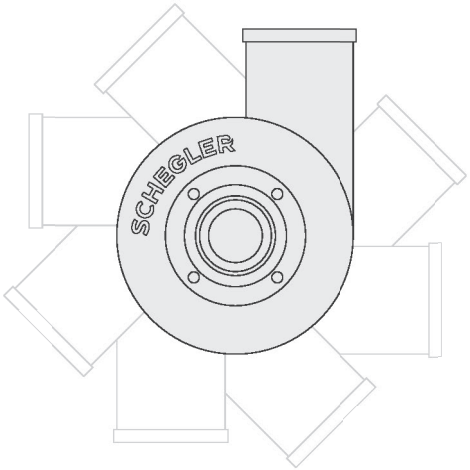


**DISCHARGE POSITION** | 0°

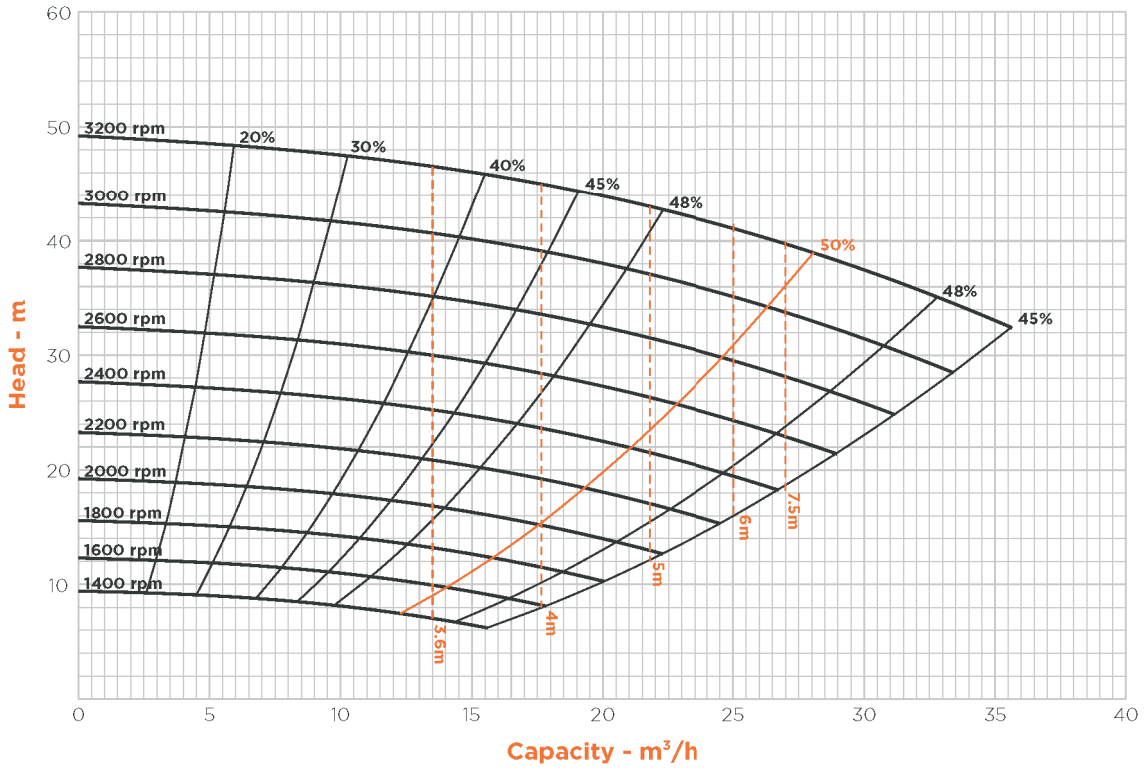

# Vigor™

## Vi1.5x1-SB.BH.IR.LR.I3VO.F1.D000-BUCT01

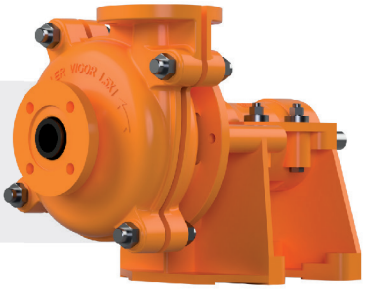

## BUILD-UP SPECIFICATIONS

| | |
|---|---|
| **Assembly type** | Build-up |
| **Motor configuration** | Top mount |

## MOTOR SPECIFICATIONS

| | |
|---|---|
| **Motor type** | Asynchronous motor |
| **Installed motor power** | 1.5 kW |
| **Housing material** | Cast iron |
| **Energy efficiency** | IE3 |
| **Voltage** | 230/400 V |
| **Mounting arrangements** | B3 |
| **Shaft speed** | 1500 RPM |
| **Poles** | 4 |
| **Motor frame size** | 90L |
| **Frequency** | 50 Hz |

**MOTOR CONFIGURATION** | TOP MOUNT

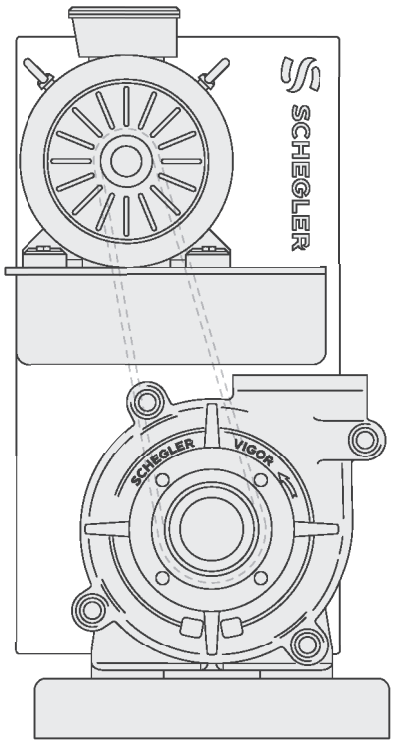

SCHEGLER®

# Vigor™

## Vi1.5x1-SB.BH.IR.LR.I3VO.F1.D000-BUCT01

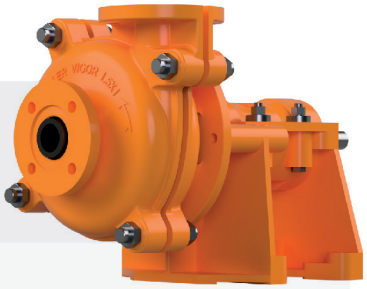

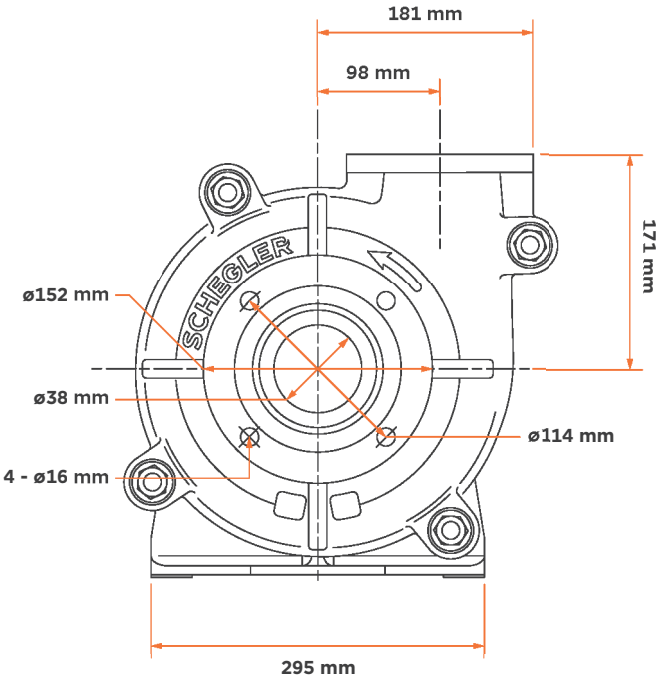


### DISCHARGE FLANGE

