SCHEGLER®

Vigor™

Vi2x1.5-SB.BH.IH.LH.I5VO.F1.D000-BUCT01



BARESHAFT SPECIFICATIONS

Series	Vigor™
Suction size	2 inch
Discharge size	1.5 inch
Sealing type	Standard expeller
Bearing type	Grease lubricated heavy duty bearing
Impeller material	High Chrome (27%) (423)
Liner material	High Chrome (27%) (423)
Impeller shaping	5 vane open (560)
Frame size	F1
Discharge position	0°
Solid passage	19 mm
Maximum RPM	3200 RPM
Maximum motor size	15 kW
Weight (Bareshaft)	100 kg

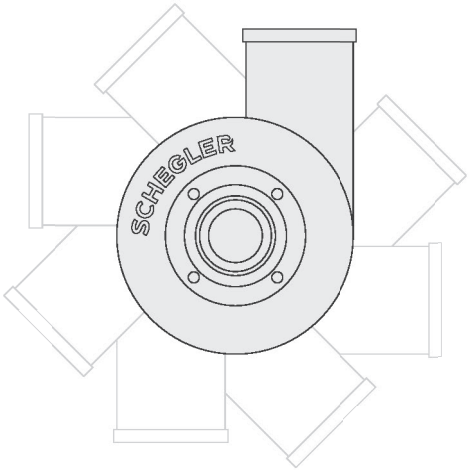

DISCHARGE POSITION | 0°

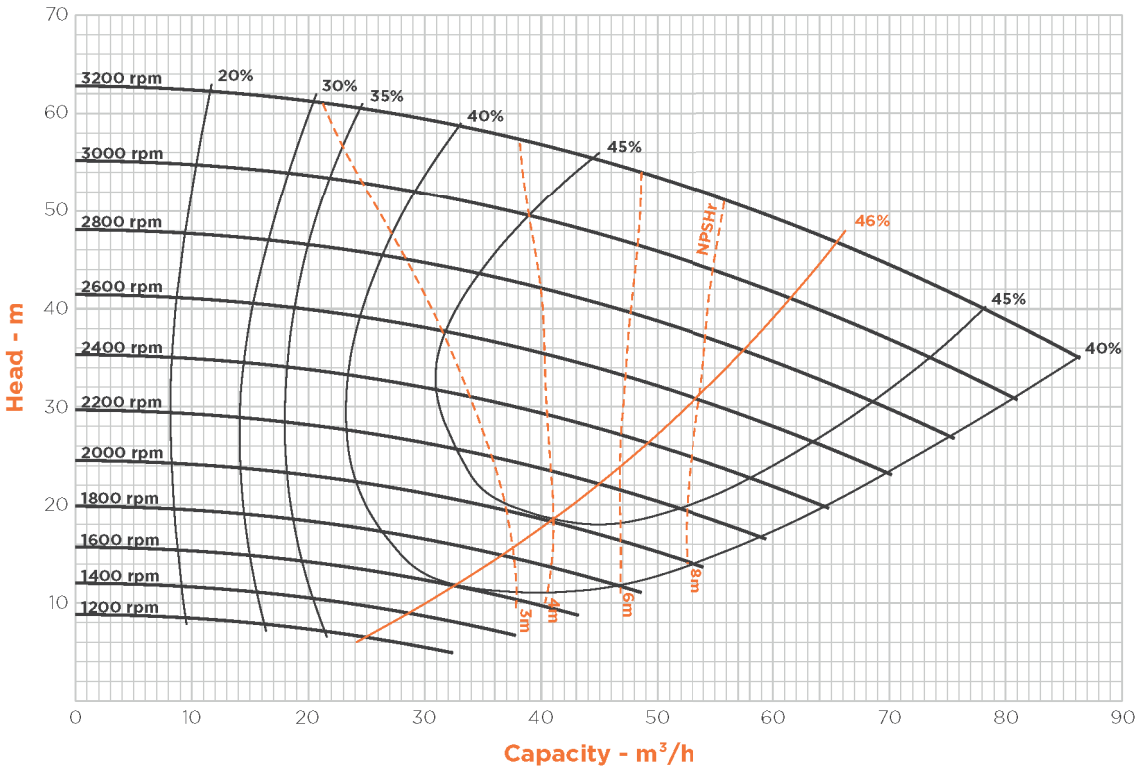

Vigor™

Vi2x1.5-SB.BH.IH.LH.I5VO.F1.D000-BUCT01



BUILD-UP SPECIFICATIONS

Assembly type	Build-up
Motor configuration	Top mount

MOTOR SPECIFICATIONS

Motor type	Asynchronous motor
Installed motor power	1.5 kW
Housing material	Cast iron
Energy efficiency	IE3
Voltage	230/400 V
Mounting arrangements	B3
Shaft speed	1500 RPM
Poles	4
Motor frame size	90L
Frequency	50 Hz

MOTOR CONFIGURATION | TOP MOUNT

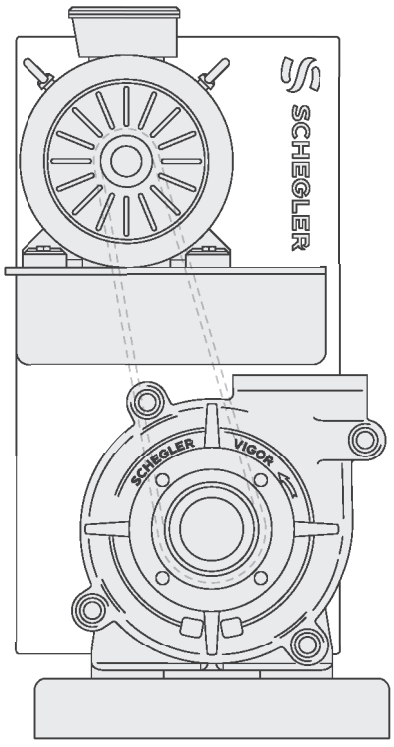

SCHEGLER®

Vigor™

Vi2x1.5-SB.BH.IH.LH.I5VO.F1.D000-BUCT01



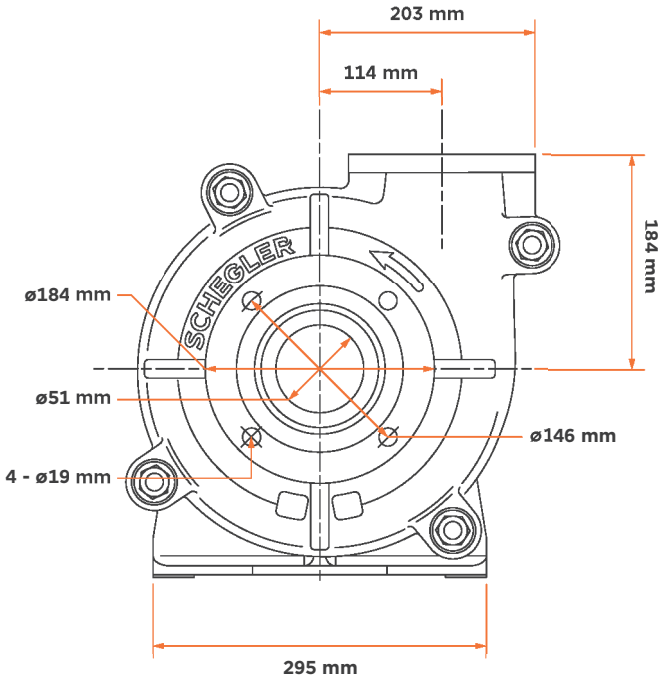

DISCHARGE FLANGE

