SCHEGLER®

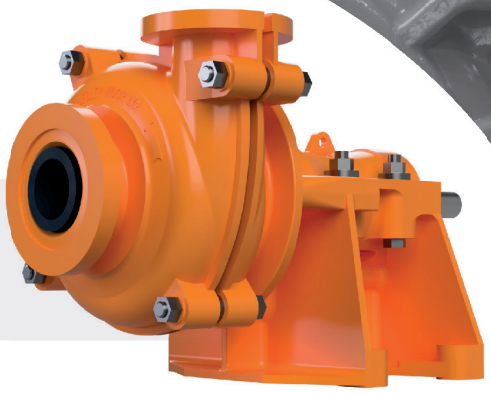

Vigor™

Vi3x2-SA.BH.IR.LR.I5VO.F2.D000-BUCT01

BARESHAFT SPECIFICATIONS

Series	Vigor™
Suction size	3 inch
Discharge size	2 inch
Sealing type	Standard gland packing
Bearing type	Grease lubricated heavy duty bearing
Impeller material	Natural rubber (50 Shore hardness) (662)
Liner material	Natural rubber (50 Shore hardness) (662)
Impeller shaping	5 vane open (560)
Frame size	F2
Discharge position	0°
Solid passage	21 mm
Maximum RPM	2300 RPM
Maximum motor size	30 kW
Weight (Bareshaft)	160 kg

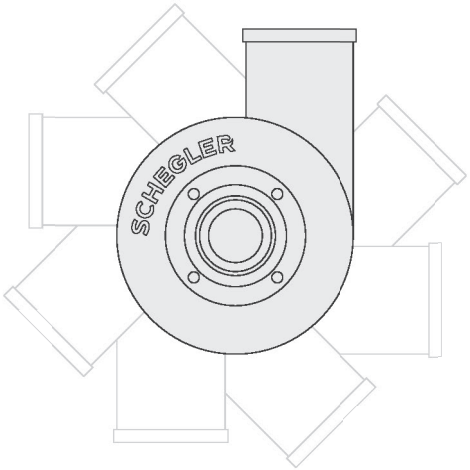

DISCHARGE POSITION | 0°

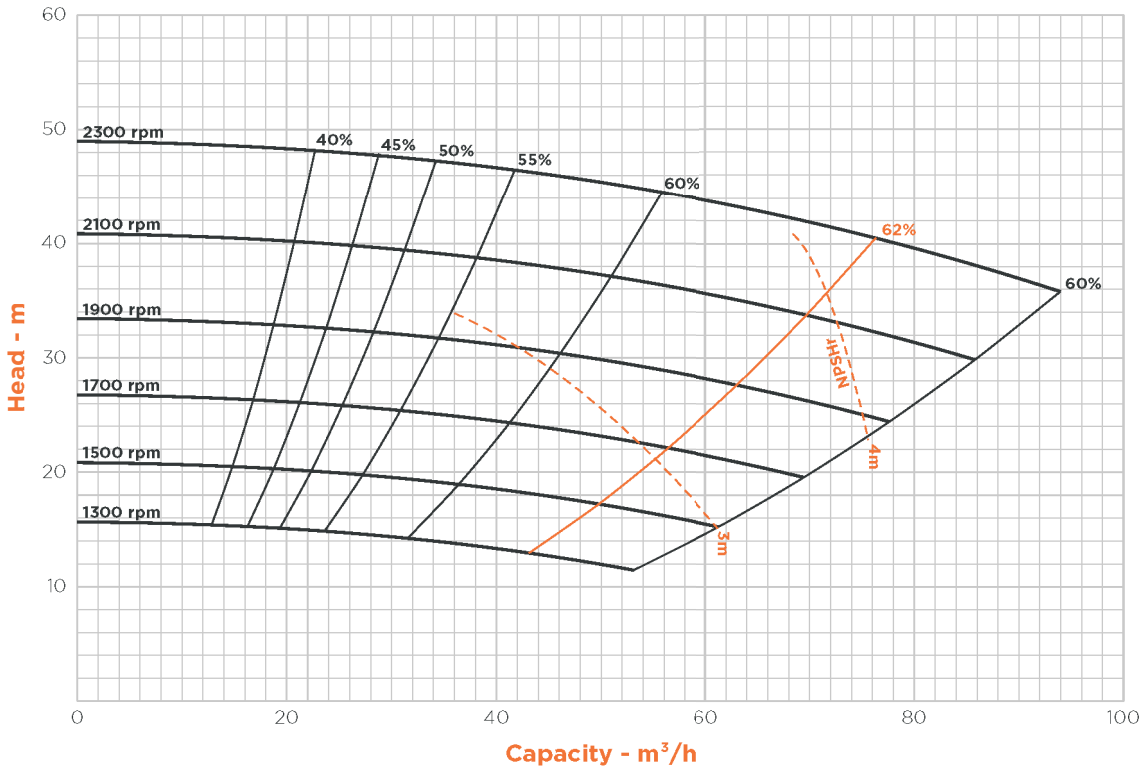

SCHEGLER®

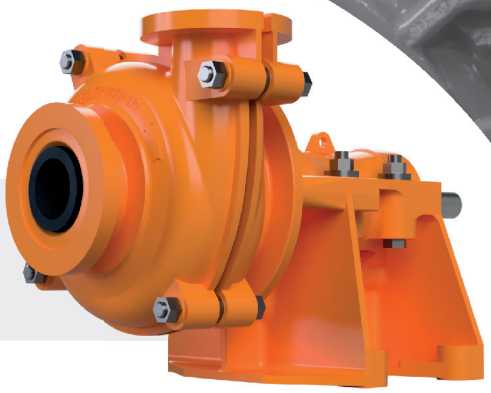

Vigor™

Vi3x2-SA.BH.IR.LR.I5VO.F2.D000-BUCT01

BUILD-UP SPECIFICATIONS

Assembly type	Build-up
Motor configuration	Top mount

MOTOR SPECIFICATIONS

Motor type	Asynchronous motor
Installed motor power	1.5 kW
Housing material	Cast iron
Energy efficiency	IE3
Voltage	230/400 V
Mounting arrangements	B3
Shaft speed	1500 RPM
Poles	4
Motor frame size	90L
Frequency	50 Hz

MOTOR CONFIGURATION | TOP MOUNT

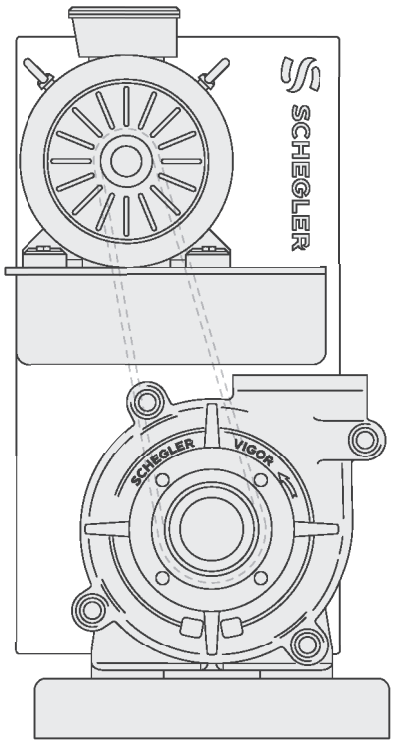

SCHEGLER®

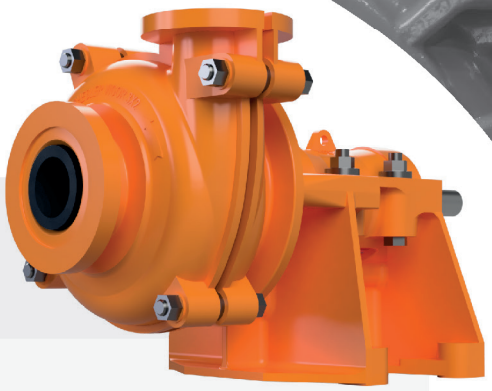

Vigor™

Vi3x2-SA.BH.IR.LR.I5VO.F2.D000-BUCT01

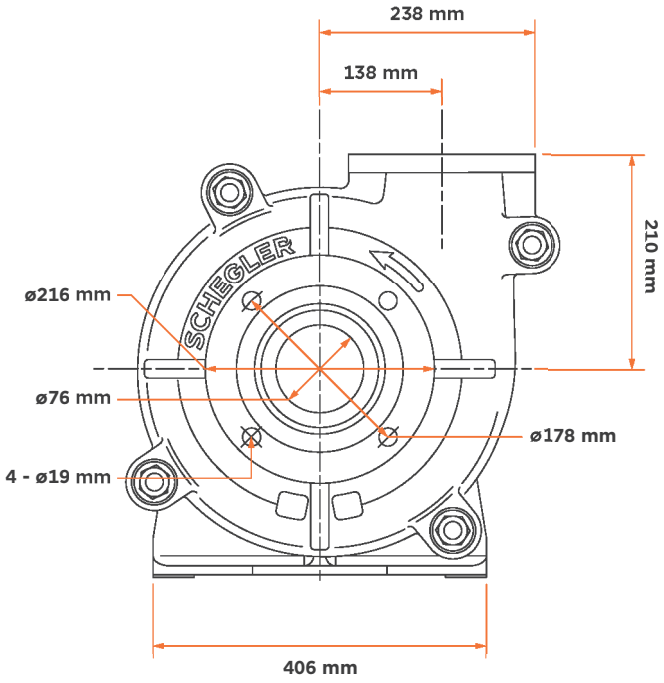

DISCHARGE FLANGE

