SCHEGLER®

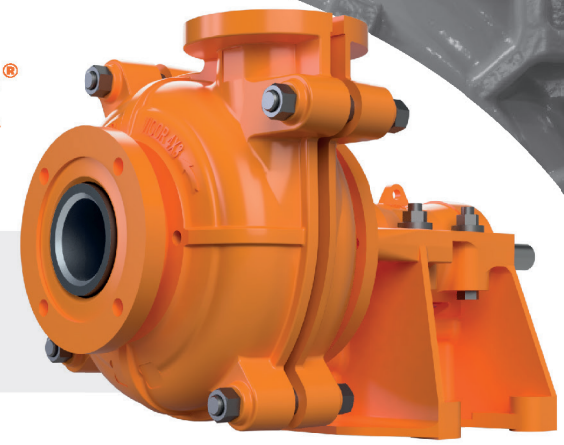

# Vigor™

## Vi4x3-SB.BH.IH.LH.I5VC.F2.D000-BUCT01

## BARESHAFT SPECIFICATIONS

| | |
|---|---|
| **Series** | Vigor™ |
| **Suction size** | 4 inch |
| **Discharge size** | 3 inch |
| **Sealing type** | Standard expeller |
| **Bearing type** | Grease lubricated heavy duty bearing |
| **Impeller material** | High Chrome (27%) (423) |
| **Liner material** | High Chrome (27%) (423) |
| **Impeller shaping** | 5 vane closed (564) |
| **Frame size** | F2 |
| **Discharge position** | 0° |
| **Solid passage** | 36 mm |
| **Maximum RPM** | 2750 RPM |
| **Maximum motor size** | 30 kW |
| **Weight (Bareshaft)** | 300 kg |

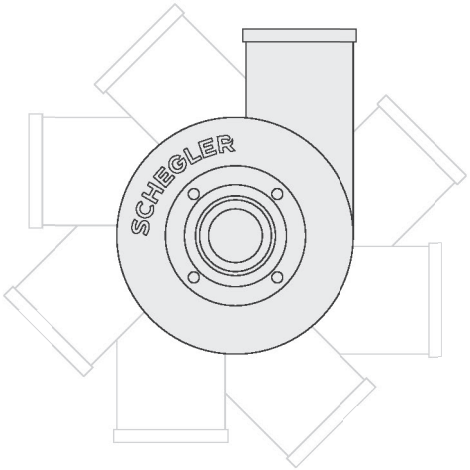


**DISCHARGE POSITION** | 0°

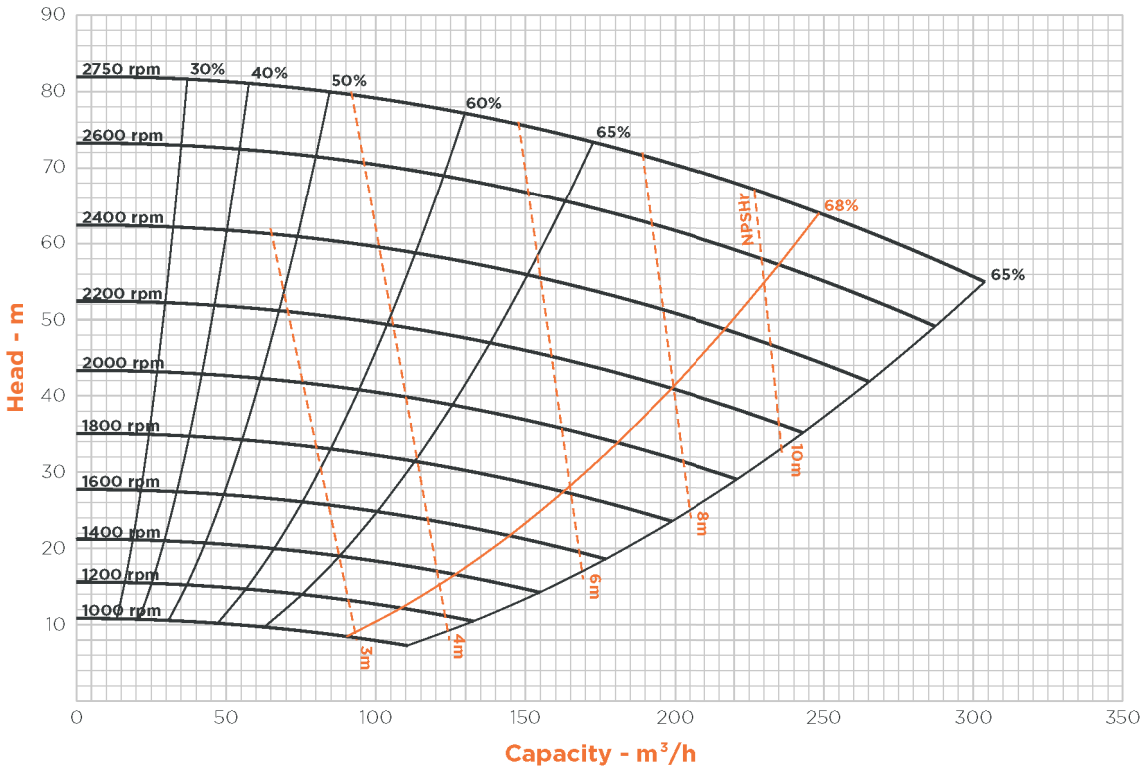

SCHEGLER®

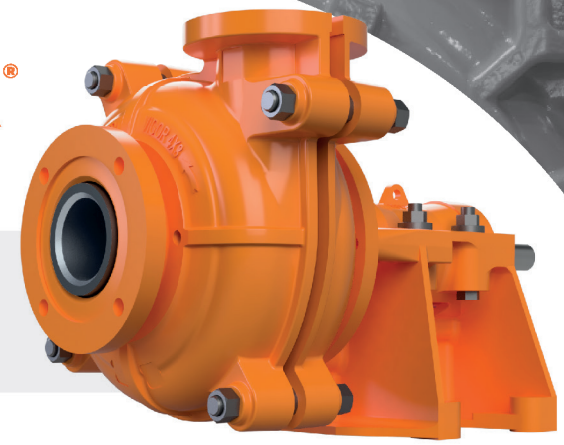

# Vigor™

## Vi4x3-SB.BH.IH.LH.I5VC.F2.D000-BUCT01

## BUILD-UP SPECIFICATIONS

| | |
|---|---|
| **Assembly type** | Build-up |
| **Motor configuration** | Top mount |

## MOTOR SPECIFICATIONS

| | |
|---|---|
| **Motor type** | Asynchronous motor |
| **Installed motor power** | 1.5 kW |
| **Housing material** | Cast iron |
| **Energy efficiency** | IE3 |
| **Voltage** | 230/400 V |
| **Mounting arrangements** | B3 |
| **Shaft speed** | 1500 RPM |
| **Poles** | 4 |
| **Motor frame size** | 90L |
| **Frequency** | 50 Hz |

**MOTOR CONFIGURATION** | TOP MOUNT

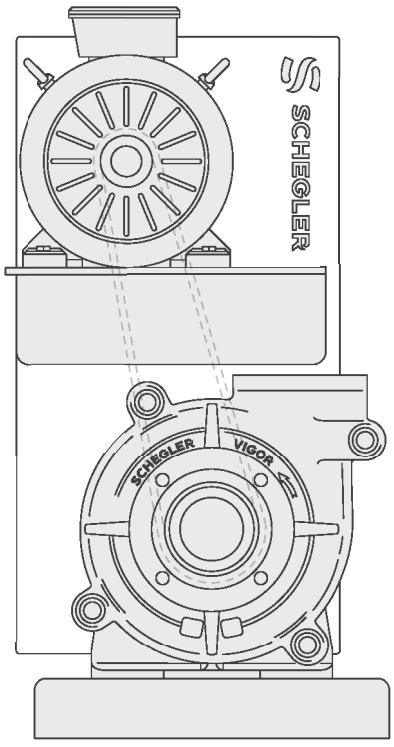

SCHEGLER®

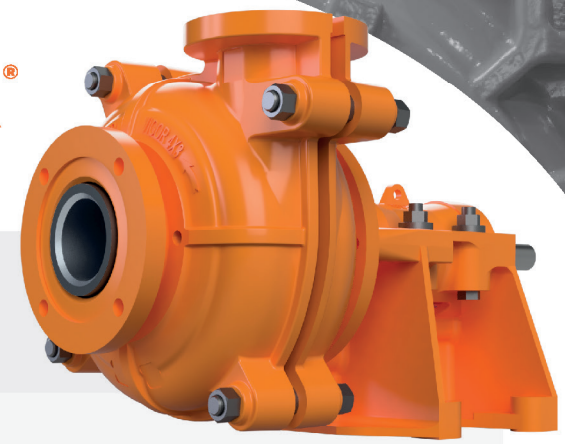

# Vigor™

## Vi4x3-SB.BH.IH.LH.I5VC.F2.D000-BUCT01

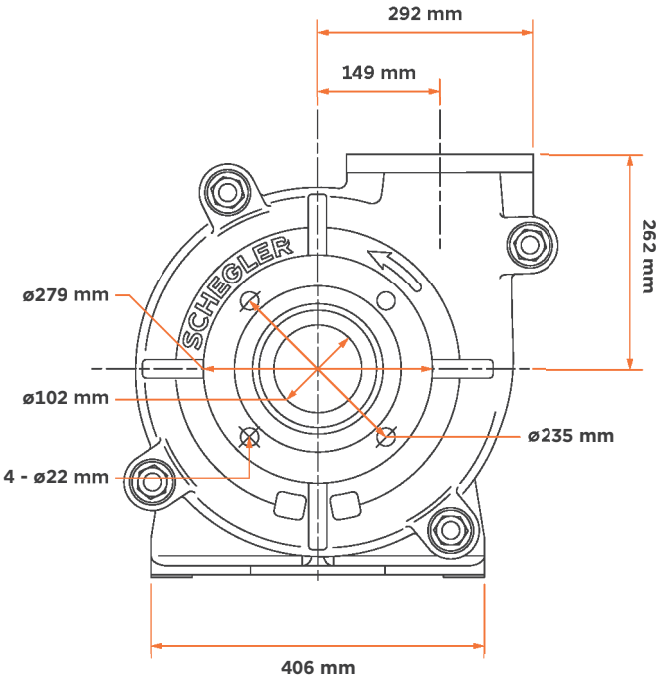


### DISCHARGE FLANGE

