SCHEGLER®

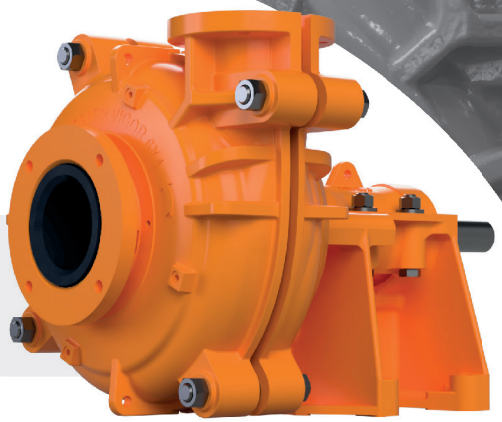

Vigor™

Vi6x4-SB.BH.IR.LR.I5VC.F3.D000-BUCT05

BARESHAFT SPECIFICATIONS

Series	Vigor™
Suction size	6 inch
Discharge size	4 inch
Sealing type	Standard expeller
Bearing type	Grease lubricated heavy duty bearing
Impeller material	Natural rubber (50 Shore hardness) (662)
Liner material	Natural rubber (50 Shore hardness) (662)
Impeller shaping	5 vane closed (564)
Frame size	F3
Discharge position	0°
Solid passage	33 mm
Maximum RPM	1350 RPM
Maximum motor size	60 kW
Weight (Bareshaft)	420 kg

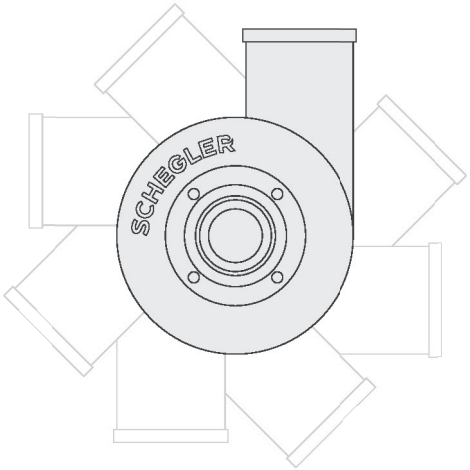

DISCHARGE POSITION | 0°

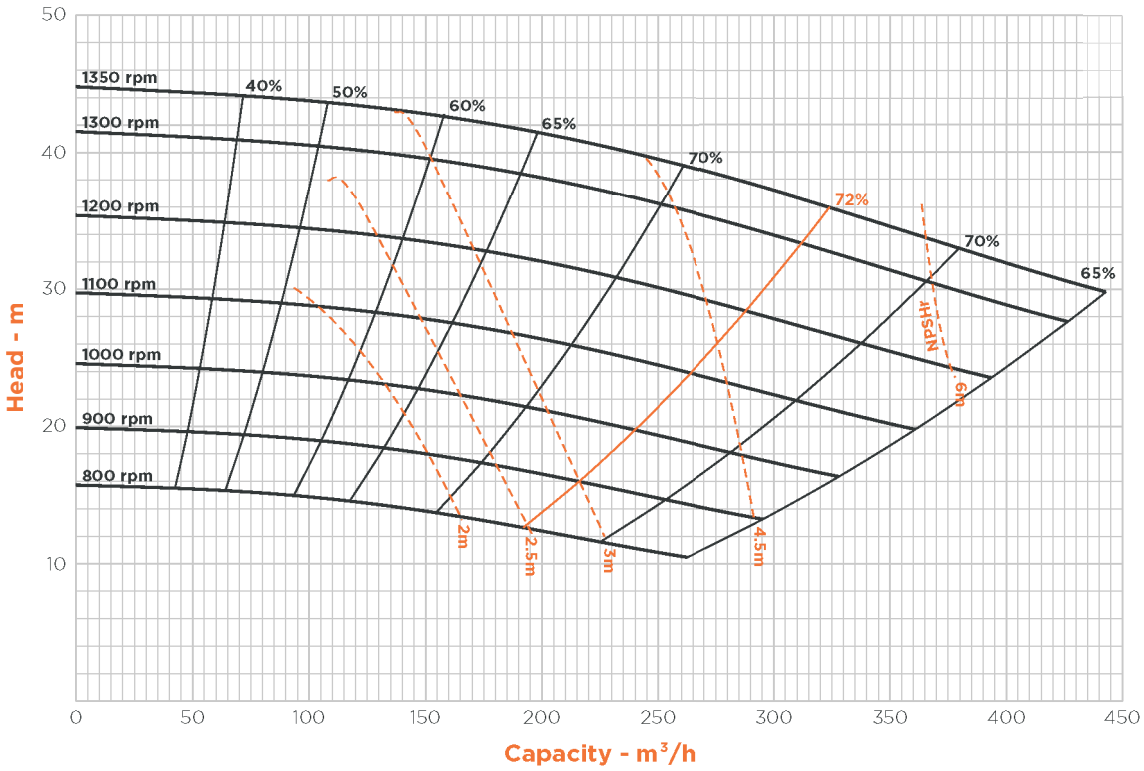

SCHEGLER®

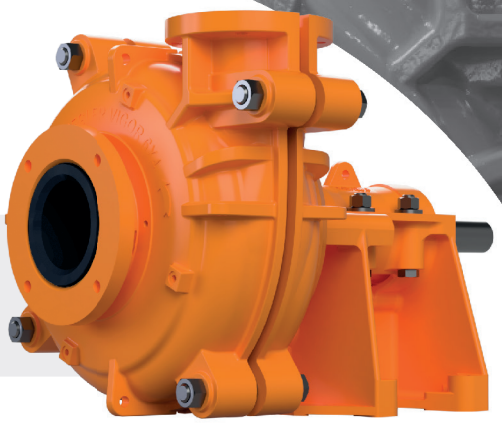

Vigor™

Vi6x4-SB.BH.IR.LR.I5VC.F3.D000-BUCT05

BUILD-UP SPECIFICATIONS

Assembly type	Build-up
Motor configuration	Top mount

MOTOR SPECIFICATIONS

Motor type	Asynchronous motor
Installed motor power	5.5 kW
Housing material	Cast iron
Energy efficiency	IE3
Voltage	400/690 V
Mounting arrangements	B3
Shaft speed	1500 RPM
Poles	4
Motor frame size	132S
Frequency	50 Hz

MOTOR CONFIGURATION | TOP MOUNT

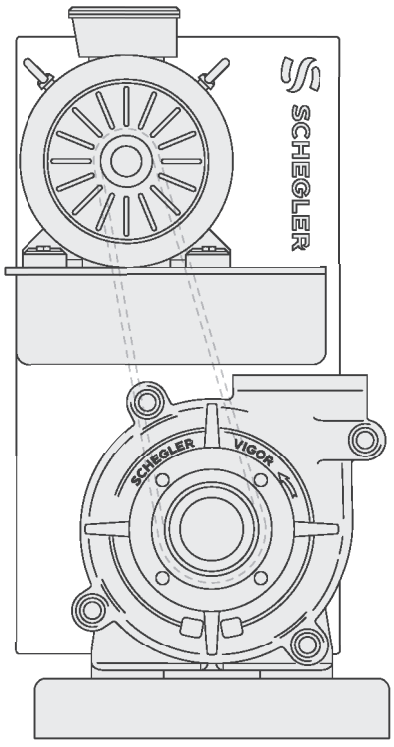

SCHEGLER®

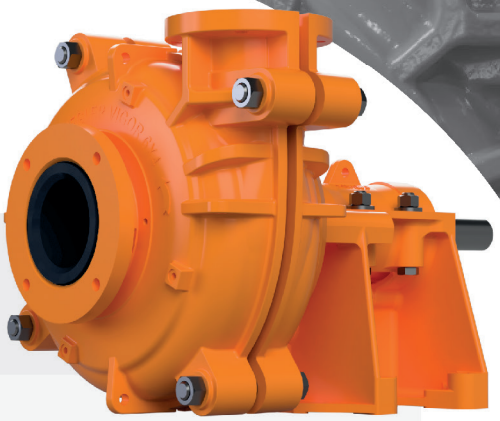

Vigor™

Vi6x4-SB.BH.IR.LR.I5VC.F3.D000-BUCT05

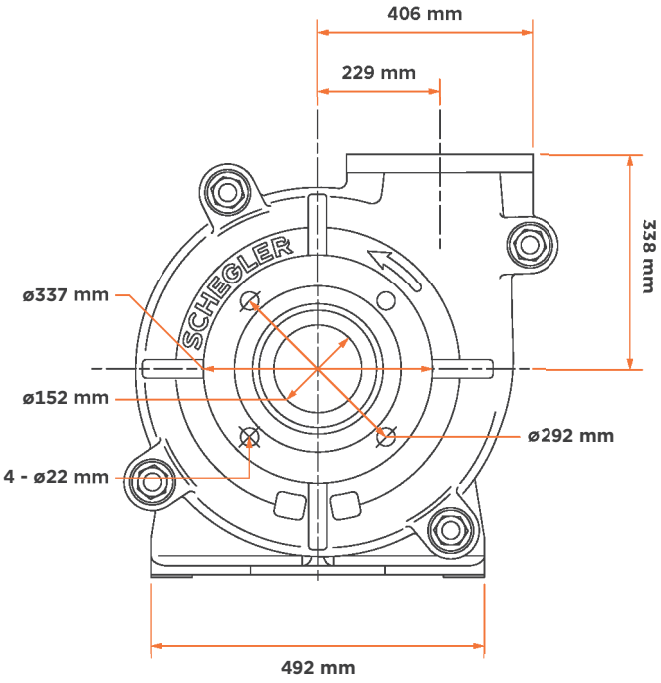

DISCHARGE FLANGE

