SCHEGLER®

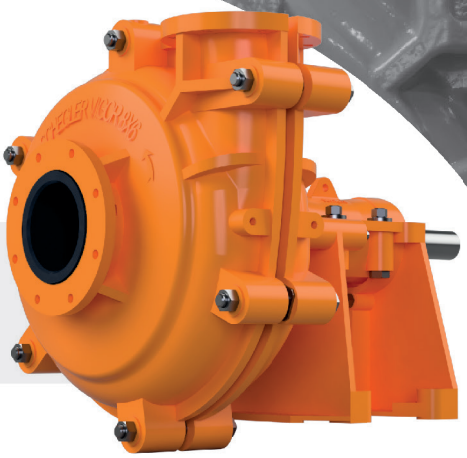

Vigor™

Vi8x6-SA.BH.IR.LR.I5VC.F4.D000-BUCT06

BARESHAFT SPECIFICATIONS

Series	Vigor™
Suction size	8 inch
Discharge size	6 inch
Sealing type	Standard gland packing
Bearing type	Grease lubricated heavy duty bearing
Impeller material	Natural rubber (50 Shore hardness) (662)
Liner material	Natural rubber (50 Shore hardness) (662)
Impeller shaping	5 vane closed (564)
Frame size	F4
Discharge position	0°
Solid passage	59 mm
Maximum RPM	1000 RPM
Maximum motor size	120 kW
Weight (Bareshaft)	980 kg

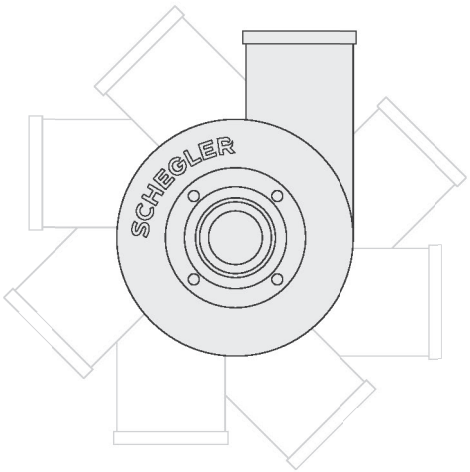

DISCHARGE POSITION | 0°

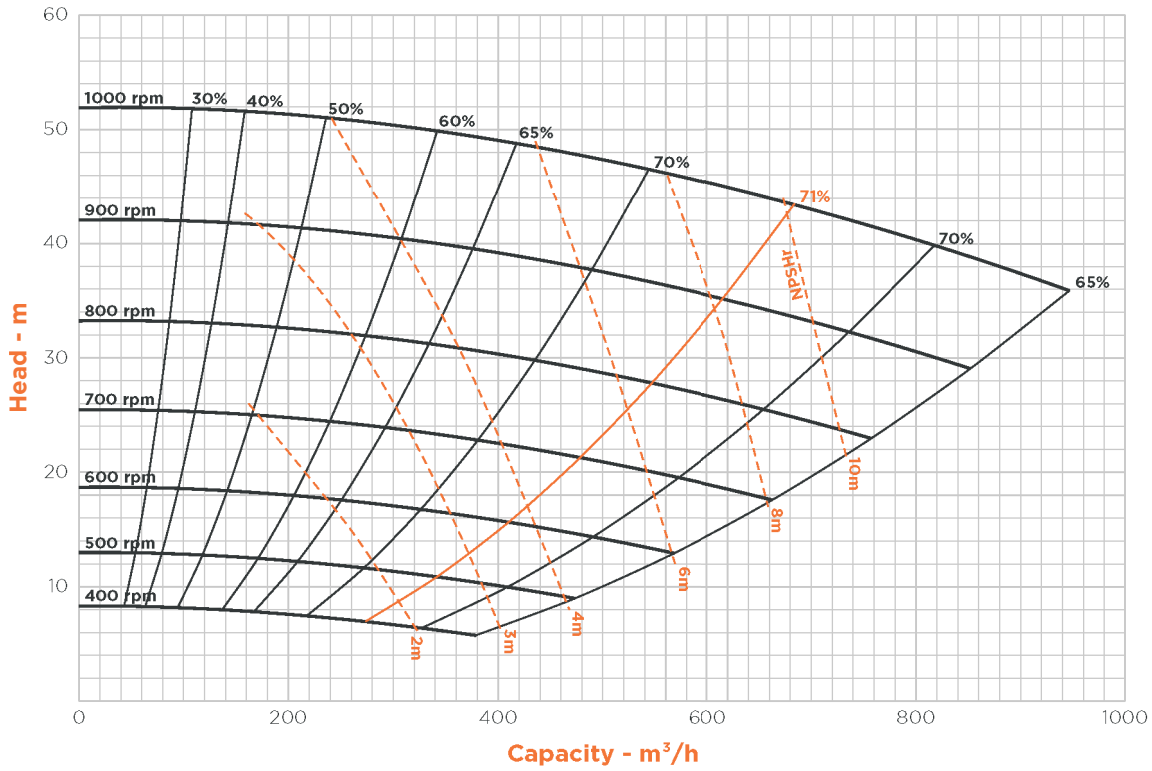

SCHEGLER®

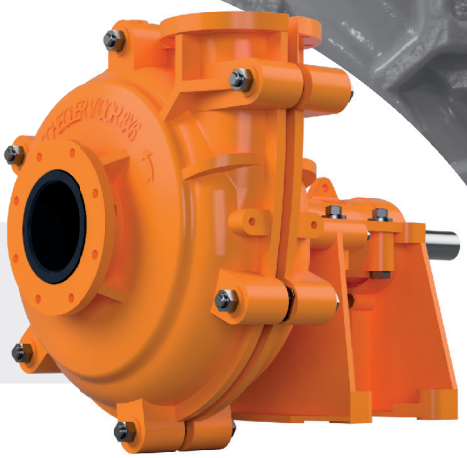

Vigor™

Vi8x6-SA.BH.IR.LR.I5VC.F4.D000-BUCT06

BUILD-UP SPECIFICATIONS

Assembly type	Build-up
Motor configuration	Top mount

MOTOR SPECIFICATIONS

Motor type	Asynchronous motor
Installed motor power	7.5 kW
Housing material	Cast iron
Energy efficiency	IE3
Voltage	400/690 V
Mounting arrangements	B3
Shaft speed	1500 RPM
Poles	4
Motor frame size	132M
Frequency	50 Hz

MOTOR CONFIGURATION | TOP MOUNT

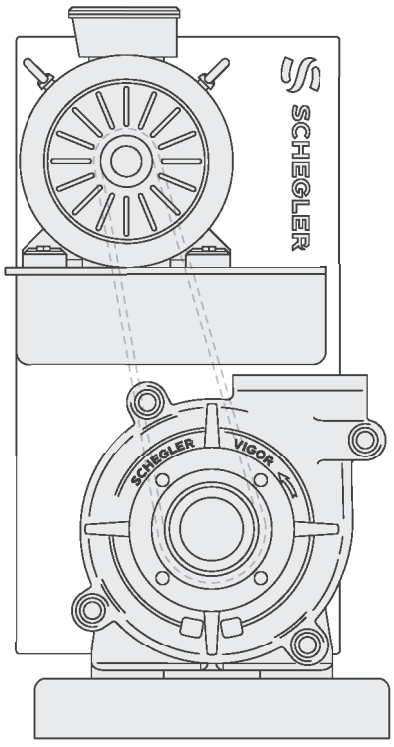

SCHEGLER®

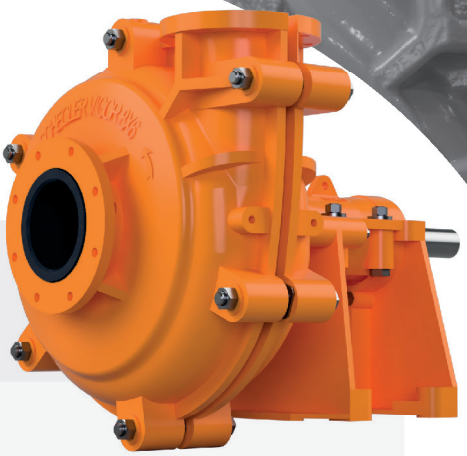

Vigor™

Vi8x6-SA.BH.IR.LR.I5VC.F4.D000-BUCT06

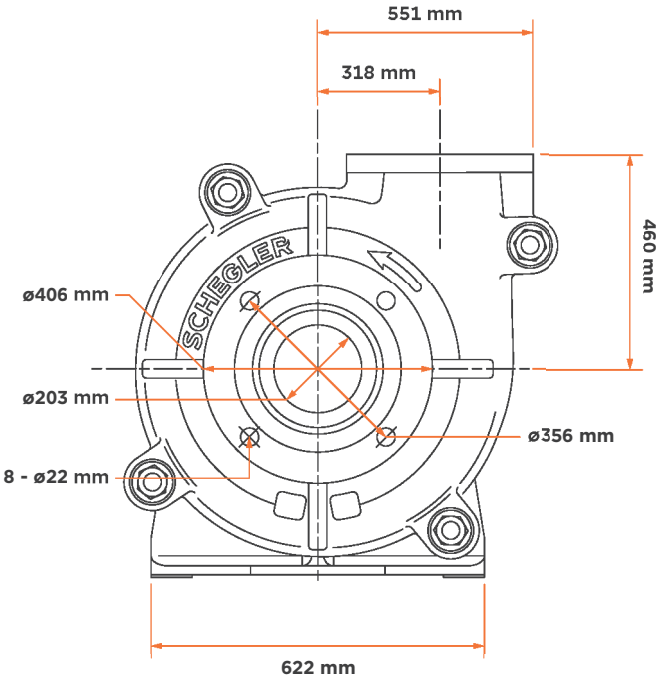

DISCHARGE FLANGE

