SCHEGLER®

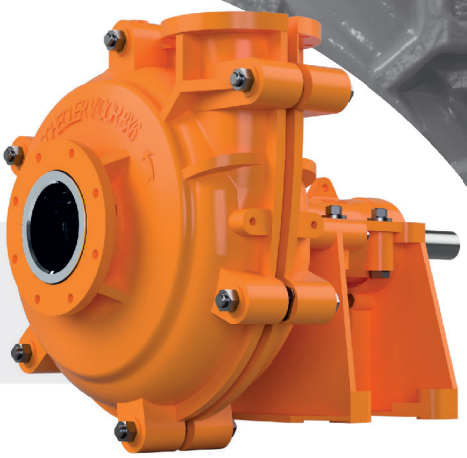

Vigor™

Vi8x6-SB.BH.IH.LH.I5VC.F4.D000-BUCT06

BARESHAFT SPECIFICATIONS

Series	Vigor™
Suction size	8 inch
Discharge size	6 inch
Sealing type	Standard expeller
Bearing type	Grease lubricated heavy duty bearing
Impeller material	High Chrome (27%) (423)
Liner material	High Chrome (27%) (423)
Impeller shaping	5 vane closed (564)
Frame size	F4
Discharge position	0°
Solid passage	63 mm
Maximum RPM	1500 RPM
Maximum motor size	120 kW
Weight (Bareshaft)	1510 kg

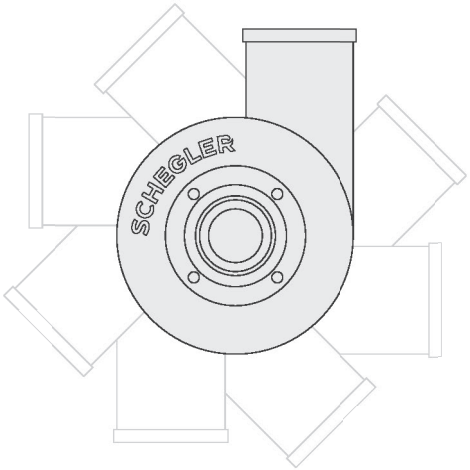

DISCHARGE POSITION | 0°

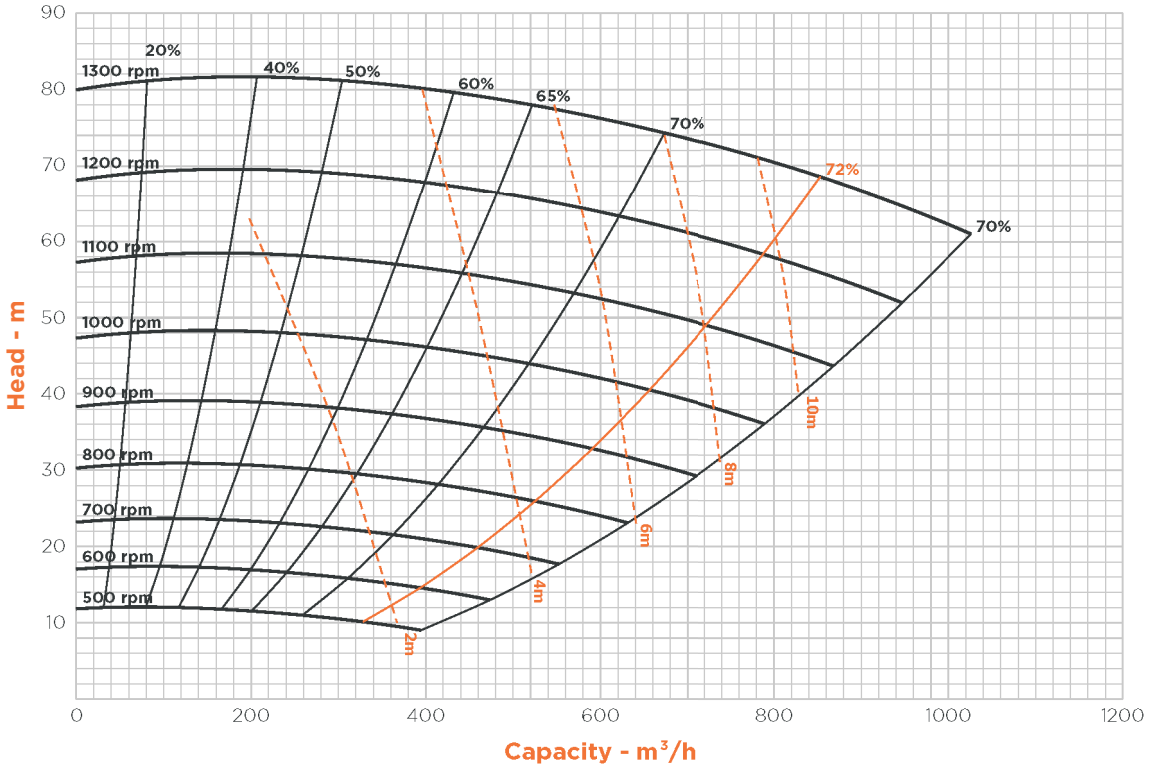

SCHEGLER®

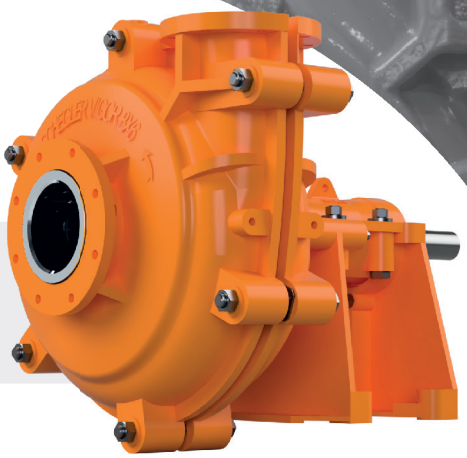

Vigor™

Vi8x6-SB.BH.IH.LH.I5VC.F4.D000-BUCT06

BUILD-UP SPECIFICATIONS

Assembly type	Build-up
Motor configuration	Top mount

MOTOR SPECIFICATIONS

Motor type	Asynchronous motor
Installed motor power	7.5 kW
Housing material	Cast iron
Energy efficiency	IE3
Voltage	400/690 V
Mounting arrangements	B3
Shaft speed	1500 RPM
Poles	4
Motor frame size	132M
Frequency	50 Hz

MOTOR CONFIGURATION | TOP MOUNT

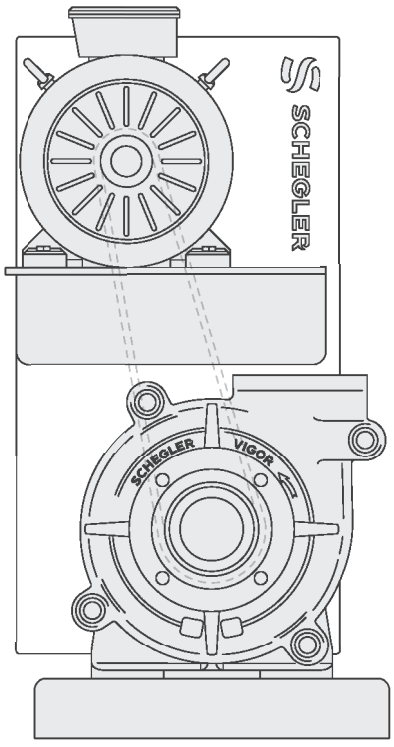

SCHEGLER®

Vigor™

Vi8x6-SB.BH.IH.LH.I5VC.F4.D000-BUCT06

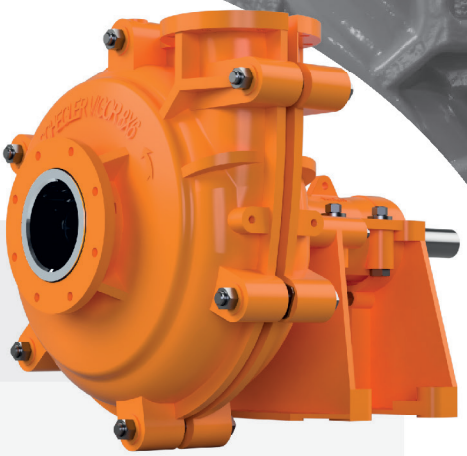

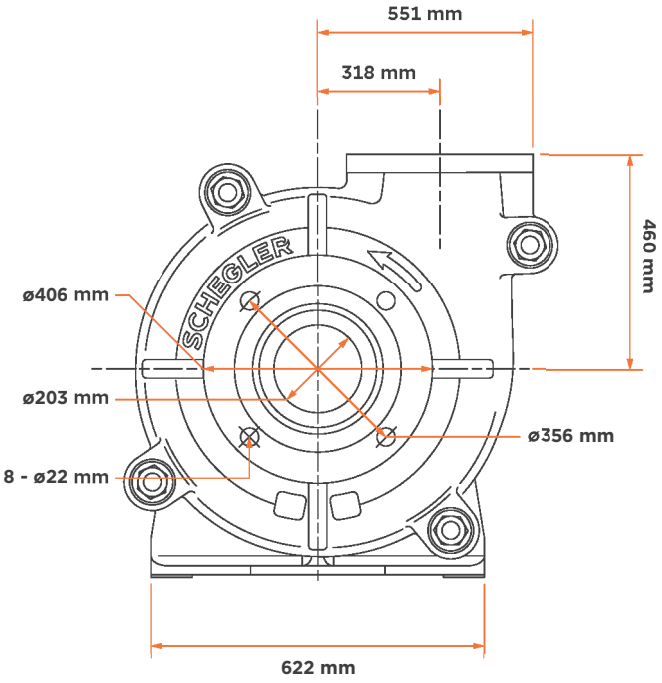

DISCHARGE FLANGE

