SCHEGLER

ROCK SOLID PUMPS

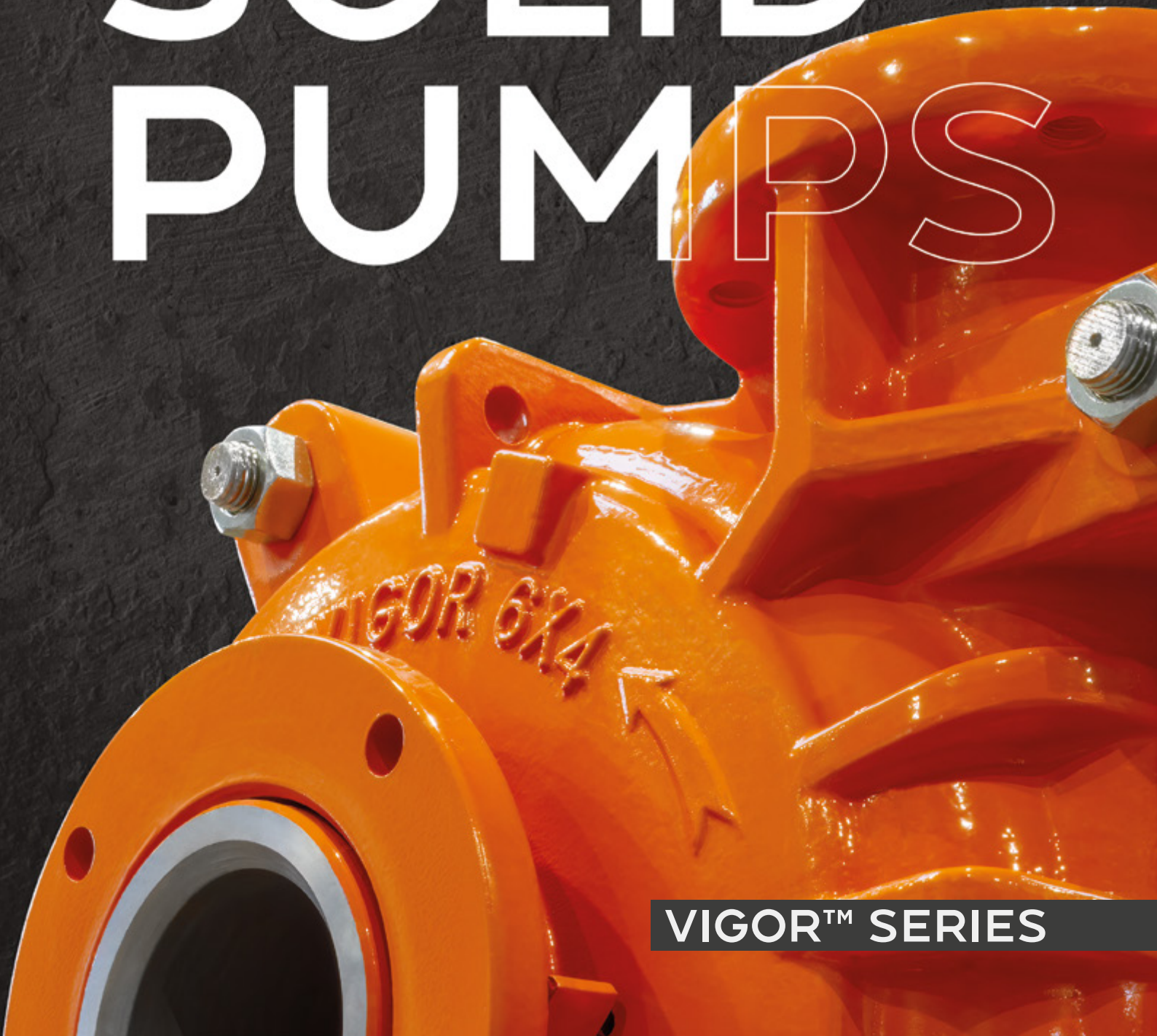

VIGOR™ SERIES

SCHEGLER® ROCK SOLID PUMPS

Schegler offers a wide range of heavy-duty pump solutions to handle the most abrasive liquids in the most challenging conditions. Firmly anchored in the quarrying, mining, dredging, recycling, and industrial processing industries, Schegler continuously monitors, analyzes, and improves processes to offer targeted solutions to its clients.

Decades of continuous improvement have led to Schegler's existing product range, offering the best slurry pumping technology available in the market. Yet, it's Schegler's strong belief that the customer comes first. That's why listening to the industry is the cornerstone of the company. Every opinion or improvement suggestion is of great value. In this way, Schegler can keep developing services and products trusted by everyone.

By setting high standards for and rigorously selecting its distributors, Schegler can provide unparalleled customer service. This trusted, well-organized distributor network guarantees quick response and short lead times, getting the necessary knowledge, workforce, and products on-site. Fast. That's the Schegler promise.





VIGOR™ SERIES HORIZONTAL SLURRY PUMP

DUE TO ITS HIGH WEAR RESISTANCE AND A HIGH DEGREE OF ADAPTABILITY, THE SCHEGLER® VIGOR™ SERIES WITHSTANDS THE MOST DEMANDING SLURRY APPLICATIONS AND HIGHEST INDUSTRY REQUIREMENTS.

This horizontal slurry pump is designed for applications where abrasive or corrosive liquids with particles must be pumped. Fluids can range from wastewater to abrasive slurries.

Numerous industries rely upon Vigor's robust modular construction for countless applications, making this highly adaptable slurry pump tested and tried in the most severe conditions.

The wet end parts of this pump are entirely replaceable, which facilitates inspections and provides ease of maintenance. The unparalleled wear resistance of its wet end parts makes Vigor a high-performance slurry pump requiring low maintenance. This results in a reliable, efficient pump with the lowest total cost of ownership for abrasive processes.

MODULAR & RUGGED DESIGN

Two main features characterize the Vigor series' design. First, there is the modular character of the pump, while on the other hand, this heavy-duty pump is set apart by its extremely robust construction.

The modular design of the Schegler Vigor pumps allows for a very high degree of customization. Given the various applications and versatility in the most demanding industries, it is necessary to correctly configure the pump to tackle the wide range of complex challenges it may face.

Every challenge comes with its specifications. Hydraulic transport of slurries is a complex physical operation. With dozens of parameters to be considered, selecting the right pump for the right application is a challenging job. An optimal selected Vigor slurry pump will withstand the most demanding applications, ensuring the best performance and longest lifespan.

Service engineers recognize a Vigor as the easiest to maintain slurry pump. Inspecting this pump consists of loosening the cover plate bolts and removing the cover plate, allowing direct access to the wet-end parts. Thanks to its cartridge-style bearing assembly, a quick swap is guaranteed when bearings are end of life.

The picture below illustrates the fundamental difference between a regular process pump and the Schegler Vigor slurry pump. Every design choice has been researched and executed to the smallest detail, making this pump stand up to the arduous task of transporting slurries.

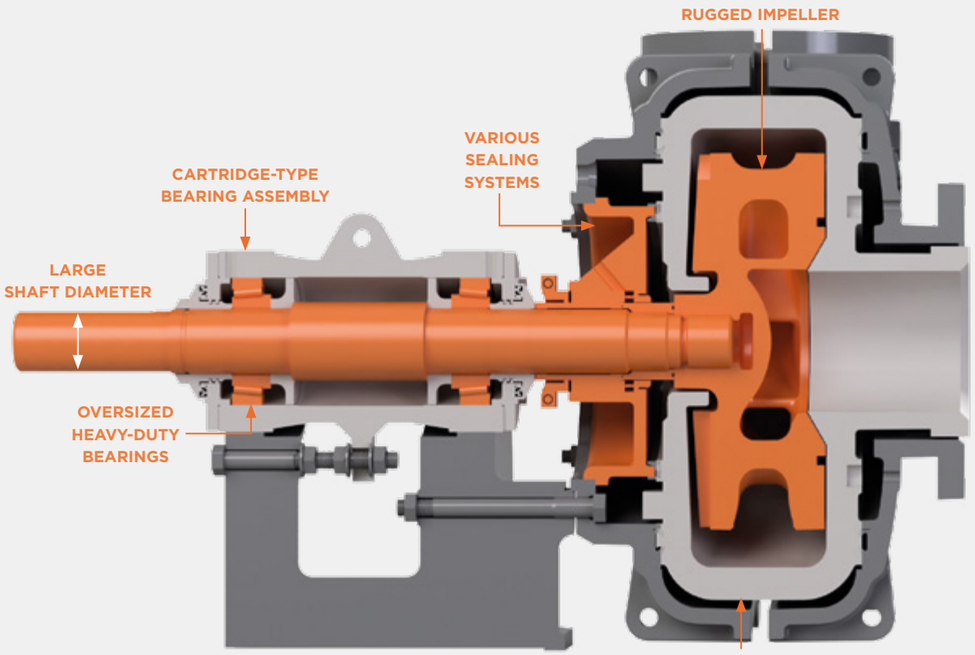

Schegler® Vigor™ Slurry Pump

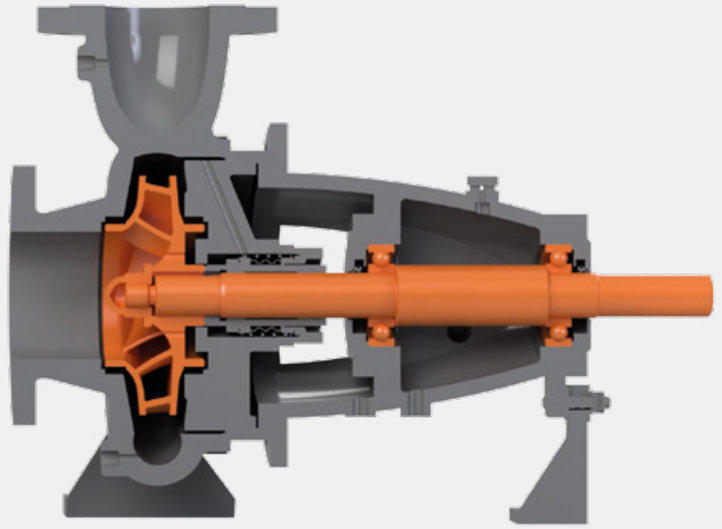

Standard water pump of the same size

PARTS DIAGRAM

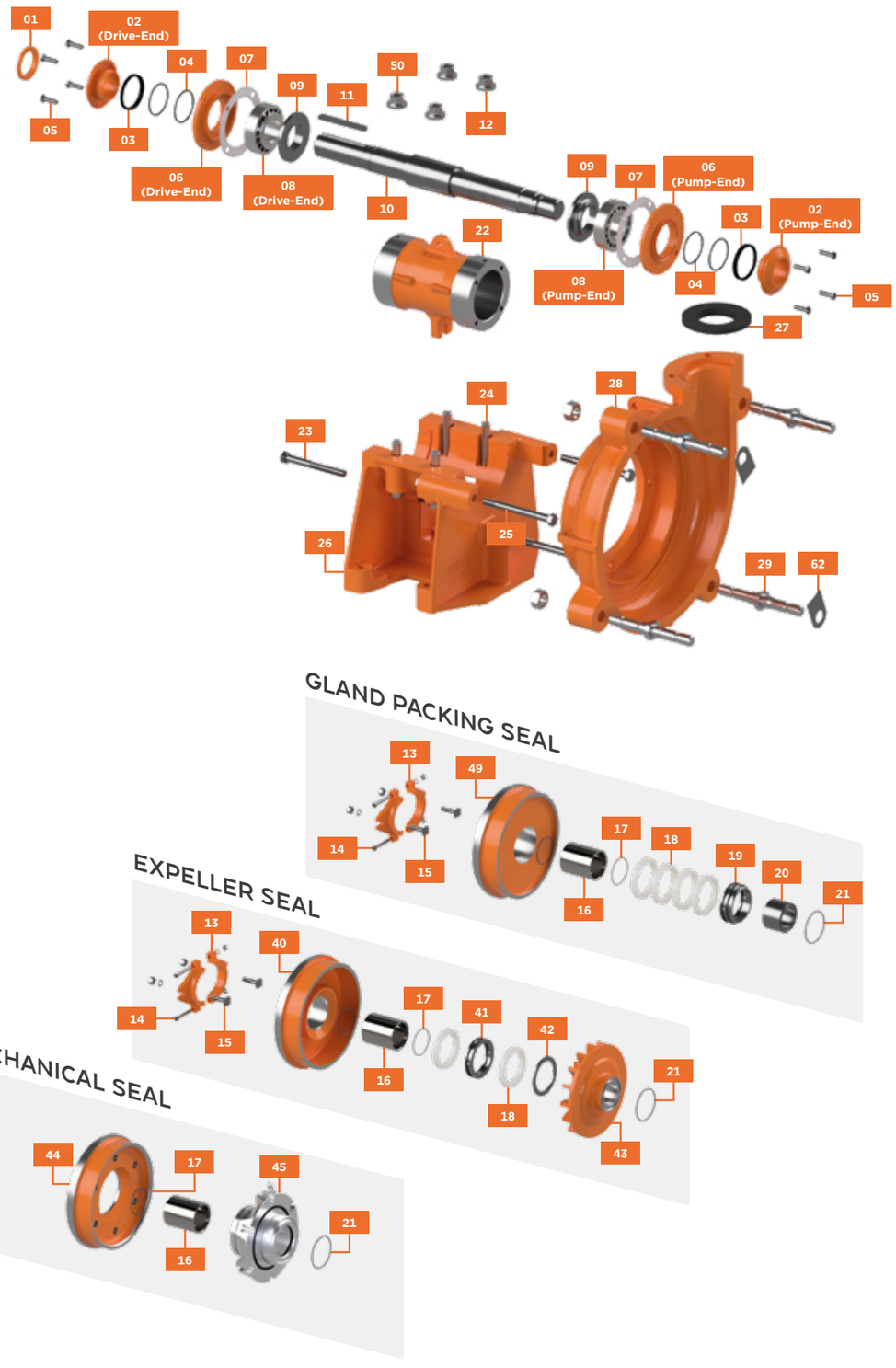



01	Labyrinth Lock Nut	14	Gland Clamp Bolt	27	Discharge Joint	41	Lantern Ring
02	Labyrinth	15	Gland Bolt	28	Frame Plate	42	Neck Ring
03	Bearing Seal	16	Shaft Sleeve	29	Cover Plate Bolt	43	Expeller
04	Piston Ring	17	Shaft Sleeve O-ring	30	Stuffing Box / Expeller Ring Seal	44	Mechanical Seal Back Plate
05	End Cover Set Screw	18	Gland Packing	31	Frame Plate Liner Insert	45	Mechanical Seal
06	End Cover	19	Lantern Restrictor	32	Volute Seal	46	FPL Insert Stud
07	Shim Set	20	Shaft Spacer	33	Volute Liner	47	Frame Plate Liner
08	Bearing	21	Impeller O-ring	34	Impeller	48	Cover Plate Liner
09	Grease Retainer	22	Bearing Housing	36	Throatbush	49	Stuffing Box
10	Shaft	23	Adjusting Screw	37	Cover Plate	50	Clamp Nut
11	Shaft Key	24	Clamp Bolt	38	Cover Plate Nut	62	Keeper Plate
12	Clamp Washer	25	Frame Plate Stud	39	Intake Joint	63	Cotter
13	Gland Assembly	26	Base	40	Expeller Ring		

SEALING SYSTEMS

In a centrifugal slurry pump, the shaft drives the impeller. The concentric space between the shaft and the pump housing requires a seal to prevent leakage. The challenge is to contain this pressurized and often abrasive liquid. A sound functioning sealing system will prevent possible mechanical failure or contamination of the environment.

Schegler has an arsenal of sealing systems for a wide variety of applications. However, the three key types of seals are gland packing, expeller seal, and mechanical seal. The table below compares the three main sealing systems for several key parameters.

Sealing system	Leakage when operating	Leakage when idle	Allowable suction pressure	Allowable discharge pressure	NPSHA	Water consumption	Maintenance frequency	Capital cost
Gland packing	Medium	Low	High	High	Low	High	High	Low
Expeller	Low	Medium	Low	Low	High	Low	Medium	Medium
Mechanical seal	None	None	High	High	Low	Low	Low	High

GLAND PACKING SEAL

Gland packing is considered the traditional seal for centrifugal slurry pumps. The packing gland, a soft, rope-like packing, is placed around the shaft sleeve. This packing remains stationary against the stuffing box as the shaft rotates, ensuring a solid shaft seal.

However, it is essential to know that friction will wear down the packing and shaft sleeve over time. Although refitting the packing is easy, this system is subject to maintenance. A modification of the gland packing seal is the flushed gland. Here, clean liquid is flushed through the gland packing into the pump, minimizing leakage and keeping the sealing system cool. Although regular inspection and proper maintenance are required, gland packing is a widely used method proven to be successful in various applications.

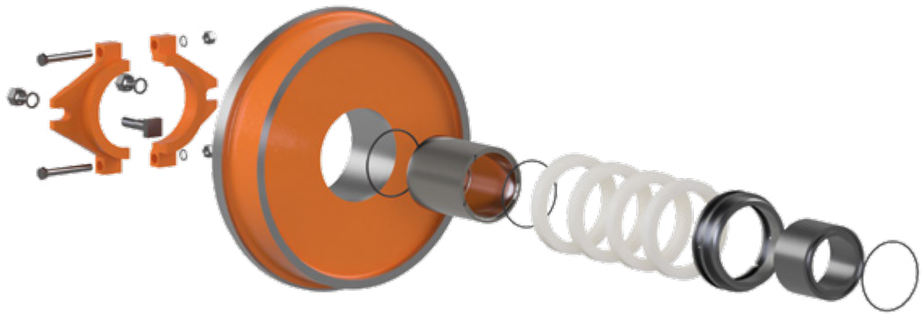

EXPELLER SEAL

The expeller seal is a hydrodynamic sealing system. This rotary expeller (often combined with pump-out vanes on the back of the impeller) is mounted behind the impeller and driven by the rotating shaft. This method reduces the hydraulic pressure at the shaft, creating a powerful expelling force that moves liquid away from the shaft towards the expeller ring.

This active sealing method has several significant advantages. The major advantage of the expeller seal is that leakage is virtually reduced to zero when the pump is running. Attention must be paid to the pump's operating speed and suction pressure to ensure optimum operation. During idleness, additional gland packing minimizes any leakage from the pump.

Other advantages of the expeller seal are that it is less subject to maintenance, and no sealing liquid is necessary. This makes the expeller seal the most commonly used sealing method in slurry pumps.



MECHANICAL SEAL

Mechanical seals are available in single or double variants to meet the demanding requirements of slurry applications. The single mechanical seal mainly consists of two parts. One component is stationary and attaches to the pump housing, while the other is fixed onto the shaft sleeve and rotates against the stationary part.

The double mechanical seal consists of two single mechanical seals with a pressurized intermediate fluid. The seal provides large radial clearances, while its advanced multi-spring design gives improved seal face loading and longer seal life. The system is supplied as a cartridge to guarantee quality and facilitate installation.
Working with a mechanical seal has many advantages. Its main benefits are high reliability and high allowable suction pressures while remaining leak-free. If other sealing systems do not meet requirements, the additional cost associated with a mechanical seal will pay for itself through significant cost savings from reducing wear to pump parts, a reduction in liquid needed for cooling, and reduced downtime. Contact your local Schegler distributor to assist with selecting the proper sealing method.

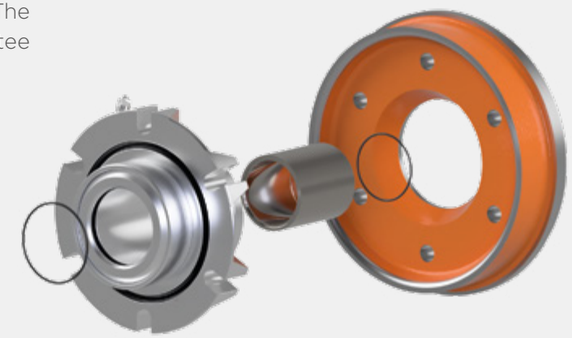

DRIVE SYSTEM

All Vigor pumps come fitted with heavy-duty grease or oil lubricated tapered-roller bearings as standard. Together with the shaft, they form the cartridge-style bearing assembly. They are sealed by a labyrinth seal, which provides a unique barrier preventing contaminants' ingress. The usage of grease retainers reduces lubricant consumption and improves maintenance intervals.

The pump base holds the bearing assembly. This robust, one-piece part helps to support the forces that the motor exerts on the pump through the bearing assembly. Its solid construction plays a crucial role in maintaining the pump's stability during operation. Each pump size can be configured in two different frame sizes allowing a wider range of motor powers.

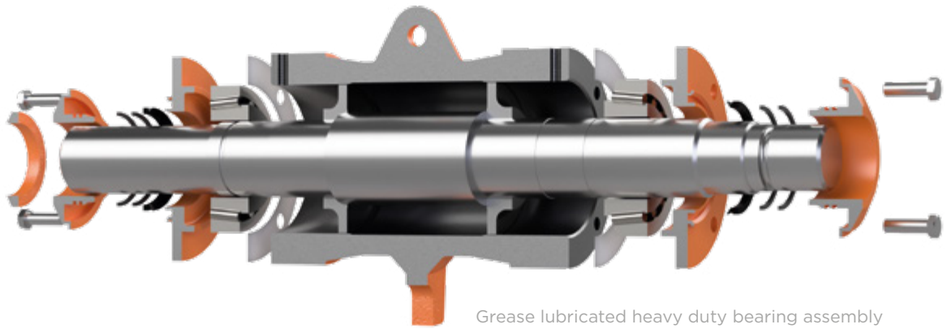

Grease lubricated heavy duty bearing assembly

DID YOU KNOW THAT 90% OF BEARING FAILURE IN SLURRY PUMPS IS CAUSED BY IMPURITIES PENETRATING THE BEARING ASSEMBLY? VIGOR'S DESIGN, IN COMBINATION WITH FREQUENT LUBRICATION OF THE LABYRINTHS, SIGNIFICANTLY REDUCES THIS RISK, ENSURING MAXIMUM LIFETIME.

The mass of Vigor's heavy-duty impellers combined with dense fluids causes radial forces on the system. Short impeller overhang and large shaft diameters minimize these radial impeller deflections. An additional positive impact of this design is drastically reduced stress on the bearing and sealing system.

The bearing cartridge is equipped with superior quality tapered-roller bearings. This contributes to a perfectly balanced, reliable bearing assembly. Axial displacement of the complete cartridge enables an easy clearance adjustment between the impeller and liner on the suction side. Depending on the application and the size of the pump, the Vigor can be equipped with an extra heavy-duty bearing assembly to withstand higher motor powers.

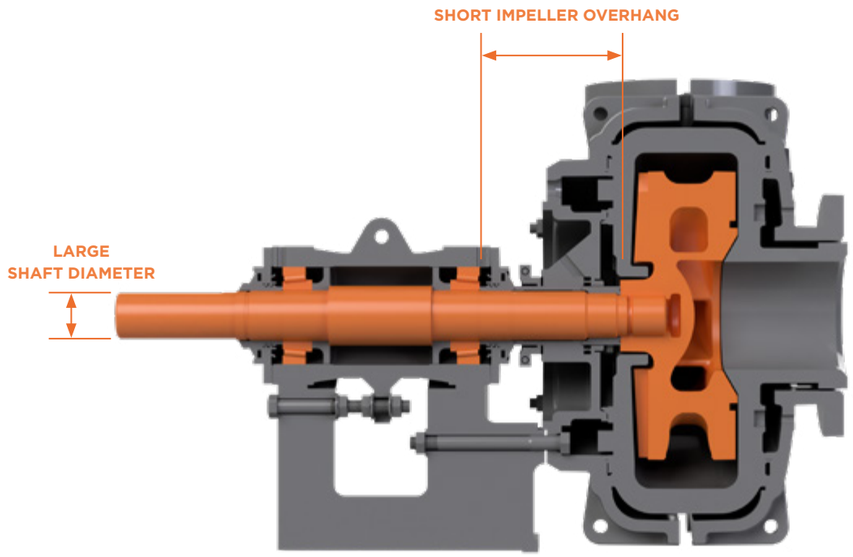

Most pump sizes can be configured in two different frame sizes allowing a wider range of motor powers.



VIGOR® 4X3
FRAME SIZE 2 (F2)
Heavy duty bearing (for F2)
Max motor size 30kW



VIGOR® 4X3
FRAME SIZE 2 (F2)
Extra heavy duty bearing (for F2)
Max motor size 45kW



VIGOR® 4X3
FRAME SIZE 3 (F3)
Heavy duty bearing (for F3)
Max motor size 60kW

ALL VIGOR BEARING ASSEMBLIES COME IN A STURDY, TAILOR-MADE WOODEN BOX TO GUARANTEE THE BEST TRANSPORT AND STORAGE CONDITIONS.



IMPELLER

Schegler offers a variety of impellers, which are optimized without compromising wear life and additional wear on the throatbush. Making these parts available in a range of shapes and high-quality materials ensures a perfect fit for a myriad of customer applications.

Schegler engineered its impellers to streamline flow paths using computational fluid dynamics. The front vane-equipped impellers provide excellent resistance to recirculating flows combined with the throatbush. While crushing of particles is reduced to a minimum. Back vanes on the impeller further reduce the pressure on the seal chamber, which significantly extends the life expectancy of the wear parts.



Front vanes



Large internal clearances



Back vanes

Rotating speed has a direct impact on wear life. Due to the large diameter and width of the impeller, low speeds are made possible, thus keeping wear to a minimum. These design choices combined with big solid passages make our impellers truly unique.

No matter how big your challenge, Schegler has the solution. With its extensive range of unique impeller shapes, the Vigor can confidently tackle any challenge. The impellers are designed with large internal clearances to pass solid particles efficiently while maintaining high performance.

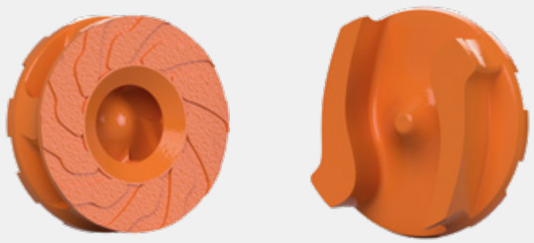

Various shapes and materials are available

IMPELLER ADJUSTMENT

Wear between the impeller and throatbush has the most significant impact on performance. Due to abrasion, the axial clearance will increase over time. Increased axial clearance forces solid particles to flow from high-pressure zones to low-pressure zones inside the pump. This effect speeds up wear and decreases the hydraulic efficiency of the pump.

Hence, it is essential to adjust the impeller regularly to keep the axial clearance to a minimum and limit further wear. Not only is efficiency during the wear cycle maintained, but it drastically improves the lifespan of the wet-end parts and the pump in general.

The impeller adjustment system of a Schegler Vigor pump is by far the most user-friendly system out there. All it takes to reduce axial clearance is to loosen the clamp bolts and drive the bearing cartridge towards the suction side by turning the nuts of the adjusting bolt. Impeller adjustment decreases wear and reduces maintenance and energy costs, ensuring the industry's best-in-class total cost of ownership.

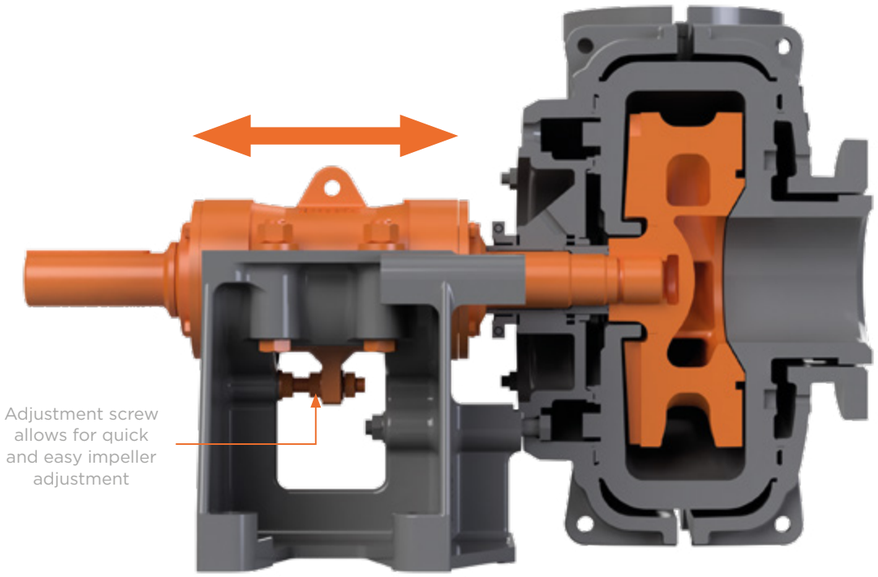

Adjustment screw allows for quick and easy impeller adjustment

BEFORE ADJUSTMENT:

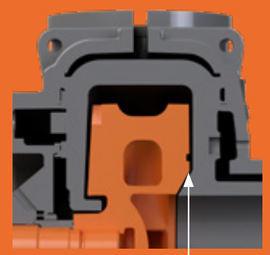

Increased axial clearance due to wear

AFTER ADJUSTMENT:

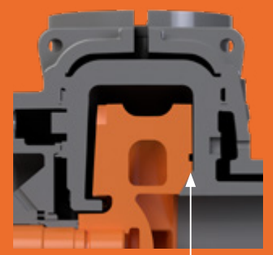

Impeller adjustment reduces axial clearance

REPLACEABLE LINERS



A Vigor pump uses interchangeable inner liners to protect the pump casing from the impact of solid particles. Depending on the fluid properties, this liner can be made in various materials, both metals and elastomers *(see p. 17 Materials)*. Consequently, the pump can be adapted in case of a change in the liquid properties.

The thickness of Schegler's industry-proven liners exceeds any other, resulting in maximum service life. When inspected regularly, replaceable liners prevent consequential damage to the cover plate and frame plate. The design of the frame plate liners allows for effortless, safe installation and easy maintenance.

LINER DESIGN

The impeller and liner shapes are matched to provide the best flow pattern and most efficient energy conversion possible for slurry duties. The liner with large, open internal passages, guides the liquid flow coming from the circumference of the impeller to the pump outlet. While doing this, it reduces flow velocity and converts its kinetic energy to pressure energy. Its design causes exceptionally low radial loads on the impeller when operating around the best efficiency point. This maximizes wear life and saves on operating costs.

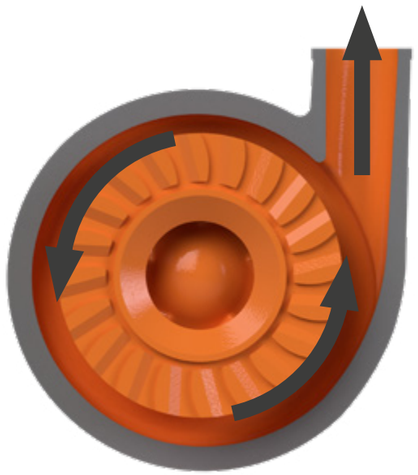

MATERIALS

The impeller and liners come in a wide range of metals and elastomers. Schegler only uses the highest quality materials for all parts in its manufacturing process. In this way, the customer is always assured of products with impeccable Schegler quality.

Selecting the proper materials is something that we at Schegler take very seriously. Informed decision-making about the material use of the impeller and liners will significantly increase wear life. Which material should be used depends on solid size, temperature, pH value, and impeller speed. The solid size, specific gravity, hardness, and shape have to be considered.



Elastomers can deform elastically



Metals can handle larger particles

In general, elastomers can deform elastically under the impact of solid particles, making them perfectly suited to resist erosion wear. However, care must be taken to ensure that the pumped liquid is compatible and that the size of the solid particles is limited. The elastomeric material may not have sufficient time to flex and absorb all the impact at higher velocities, so its use is associated with lower rotational speeds.

Metals
High Chrome
Hastelloy
Stainless Steel
Cast Iron
Ultra-High Chrome
Duplex Stainless Steel
Hyper Chrome

Elastomers
Natural Rubber
Reinforced Rubber
Butyl Rubber
Neoprene Rubber
Polyurethane
Hypalon

More material choices are available on request

If higher rotational speeds of the pump are desired, it can be opted to use parts in metal. Schegler offers impellers and liners in various metals, each with its characteristics. Metal parts can handle higher speeds, more prominent and sharper particles than their elastomeric variants.

PARAMETERS FOR MATERIAL SELECTION:

Solid size
(solid specific gravity, shape, hardness)

pH and chemicals

Slurry temperature

Impeller speed

Are you looking for a Vigor pump tailored to your specific application? Whether metal or elastomer parts are to be used, Schegler has a solution for your application. Schegler's qualified distributors are ready to assist you with all your pumping needs.

MOTOR CONFIGURATIONS

The drive of a slurry pump varies according to the space available, the properties of the slurry, the capacity, and maintenance requirements. A slurry pump can be driven in two ways, directly by a motor or by a principle that uses a v-belt and pulleys.

The advantage of a direct drive pump (CD) is that this system has a low failure rate, no loss of speed, and guarantees high efficiency. However, this configuration has some limitations. The setup takes up a relatively large floor area, and the pump's speed is fixed, making its work range narrow.

The configurations with a belt-driven pump (CT, CB, CR, CL, and CS) make the pump quickly adapted to workflow changes and specific site and maintenance requirements. Replacing the v-belt pulleys can change the pump's speed, adjusting its performance characteristics to meet better efficiency. The v-belt further absorbs vibrations, extending the motor's life, while its ability to slip when overloaded increases safety.

Because each system has its advantages, it is essential to know that more than just the pump and motor speed must be considered when choosing a particular system. Your Schegler distributor will be happy to help you find the right solution for your pumping challenge.



Belt-driven top-mount (CT) configuration

CB | Back top mount

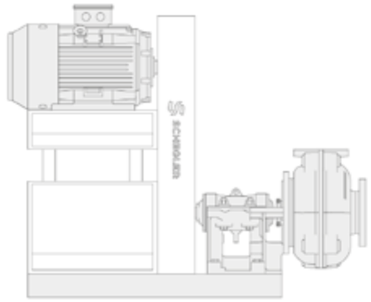

When the selected motor is too large to be top-mounted (CT)

CD | Direct drive



When speed is fixed and sufficient ground area is available

CT | Top mount

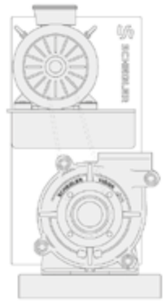

When speed can be variable, and floor space is limited

CS | Sliding base top mount

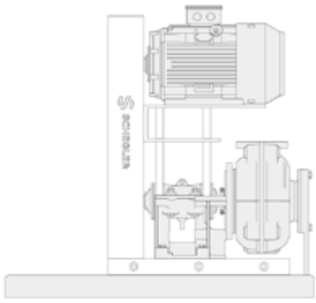

Same benefits as CT, with the added benefit of extra serviceability

CL | Left side mount

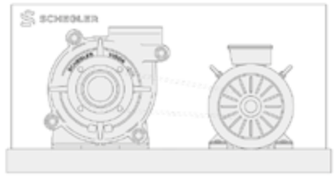

When speed can be variable, and above ground space is limited

CR | Right side mount

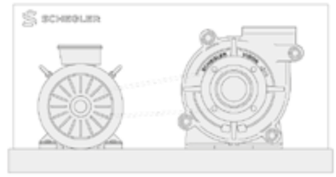

When speed can be variable, and above ground space is limited

DISCHARGE POSITIONS

The discharge outlet of all Schegler Vigor pumps can be positioned in eight different positions, with *D000* being the standard position. As this position may not be desirable in specific applications, the pump housing is rotatable in steps of 45° without requiring any modifications to the pump.

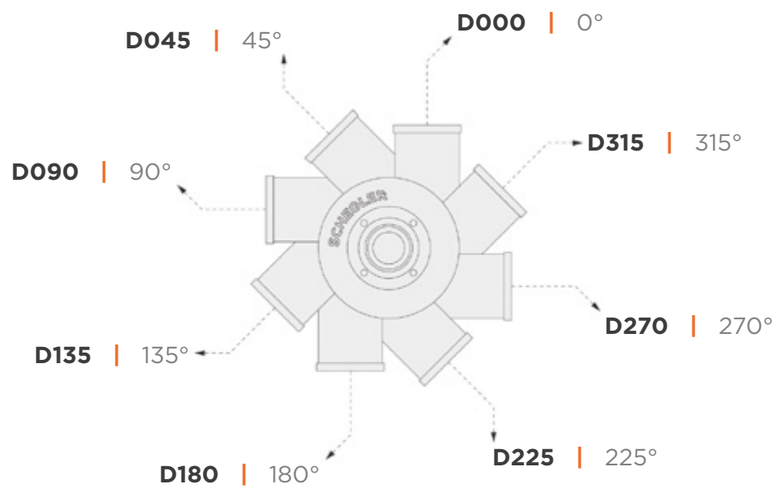

For example, in cyclone feed systems, position *D000* may have an adverse effect on the wear life of the liners and impeller. Gravity can cause the outflow of solid particles to be restricted, allowing them to recirculate inside the pump. In this case, rotating the pump housing can be an easy solution to extend the wear part's lifespan. In other scenarios, providing the discharge outlet at the bottom may be recommended as this position allows the pump's drainage to happen without slurry blocking the impeller.

This feature indicates, once again, the extent to which this Vigor series is adaptable to the customer's needs. Thanks to Schegler's commitment to providing the best performance, reducing wear, and minimizing maintenance costs, you can benefit from one of the lowest total costs of ownership in the industry.

SCHEGLER OFFERS A WIDE RANGE OF COUNTER FLANGES TO ACCOMMODATE DIFFERENT HOSE AND PIPE STANDARDS. CONTACT YOUR SCHEGLER DISTRIBUTOR TO FIND OUT MORE!

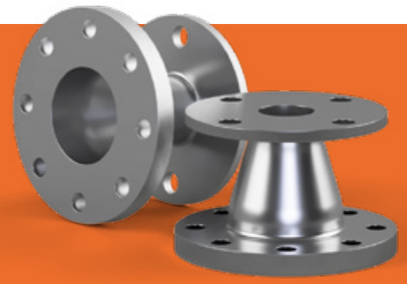

DIMENSIONS

FRONT VIEW

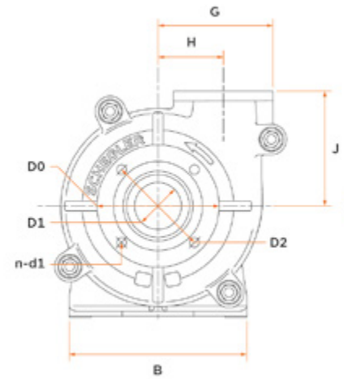

SIDE VIEW

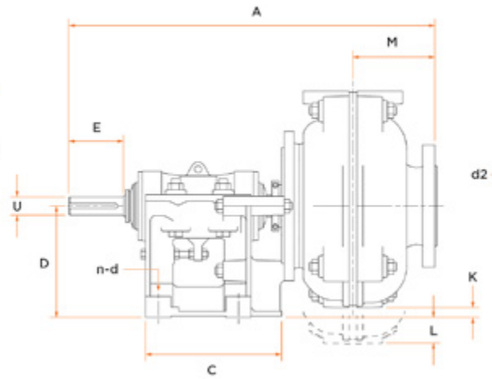

DISCHARGE FLANGE



Size	Frame	A	B	C	D	U	E	Shaft Key	G	H	J	K	L	M
Vi1.5x1	F1	583	295	248	197	28	79	8x7	181	98	171	46	/	106
Vi2x1.5	F1	596	295	248	197	28	79	8x7	203	114	184	33	/	115
Vi3x2	F2	777	406	311	254	42	122	12x8	238	138	210	67	/	156
Vi4x3	F2	848	406	311	254	42	121	12x8	292	149	262	20	/	192
Vi4x3	F3	948	492	364	330	65	152	18x11	292	149	262	100	/	192
Vi6x4	F3	1028	492	364	330	65	150	18x11	406	229	338	12	/	228
Vi6x4	F4	1188	622	448	457	80	220	22x14	406	229	338	139	/	228
Vi8x6	F4	1318	622	448	457	80	222	22x14	551	318	460	/	62	292
Vi8x6	F5	1518	857	635	610	100	279	28x16	551	318	460	91	/	304

			SUCTION FLANGE				DISCHARGE FLANGE				PUMP WEIGHT (KG)	
Size	Frame	n-d	D0	D1	D2	n-d1	d0	d1	d2	n-d2	Metal	Elastomer
Vi1.5x1	F1	4 - ø14	152	38	114	4 - ø16	152	25	114	4 - ø16	90	75
Vi2x1.5	F1	4 - ø14	184	51	146	4 - ø19	165	38	127	4 - ø19	100	85
Vi3x2	F2	4 - ø19	216	76	178	4 - ø19	203	51	165	4 - ø19	200	160
Vi4x3	F2	4 - ø19	279	102	235	4 - ø22	229	76	191	4 - ø22	300	230
Vi4x3	F3	4 - ø22	279	102	235	4 - ø22	229	76	191	4 - ø22	380	280
Vi6x4	F3	4 - ø22	337	152	292	4 - ø22	279	102	235	4 - ø22	660	420
Vi6x4	F4	4 - ø29	337	152	292	4 - ø22	279	102	235	4 - ø22	810	620
Vi8x6	F4	4 - ø29	406	203	356	8 - ø22	368	152	324	8 - ø22	1510	980
Vi8x6	F5	4 - ø29	406	203	356	8 - ø22	368	152	324	8 - ø22	1650	1160

Contact your Schegler distributor for dimensions of larger pump sizes. All dimensions are in millimeters. Dimensions are for reference only.

FAMILY CURVES

The curves below show pump performance with clean water. The curves should only be used to make a primary selection. Ask your Schegler distributor for detailed specification sheets per model.

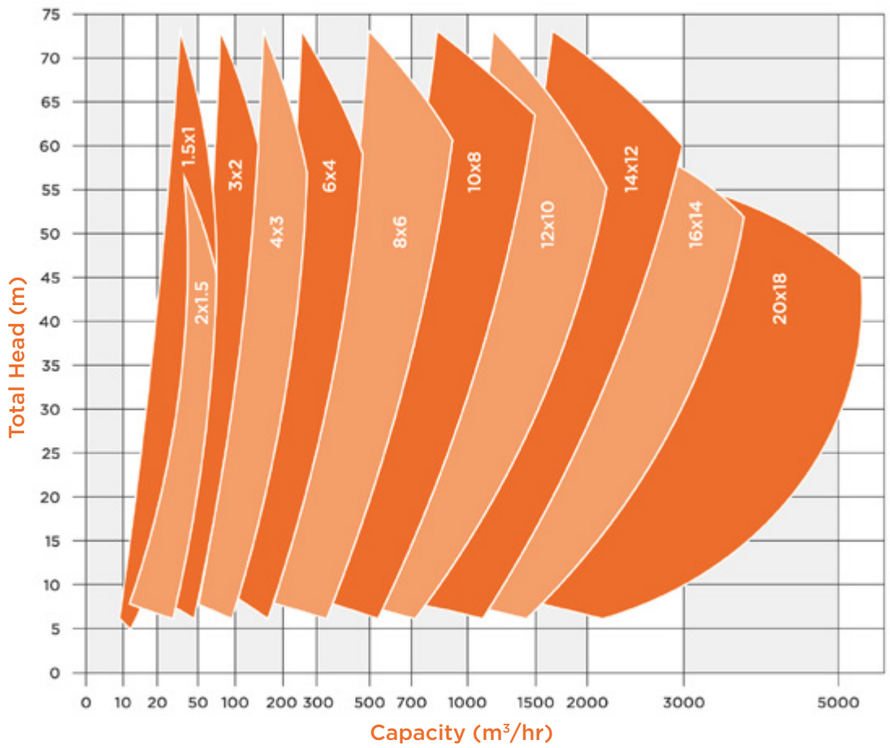



MAINTENANCE IS MADE EASY WITH SCHEGLER'S SHAFT BLOCKING KEYS!

SCHEGLER®

This brochure is offered to you by
your local partner: