SCHEGLER

ROCK SOLID PUMPS

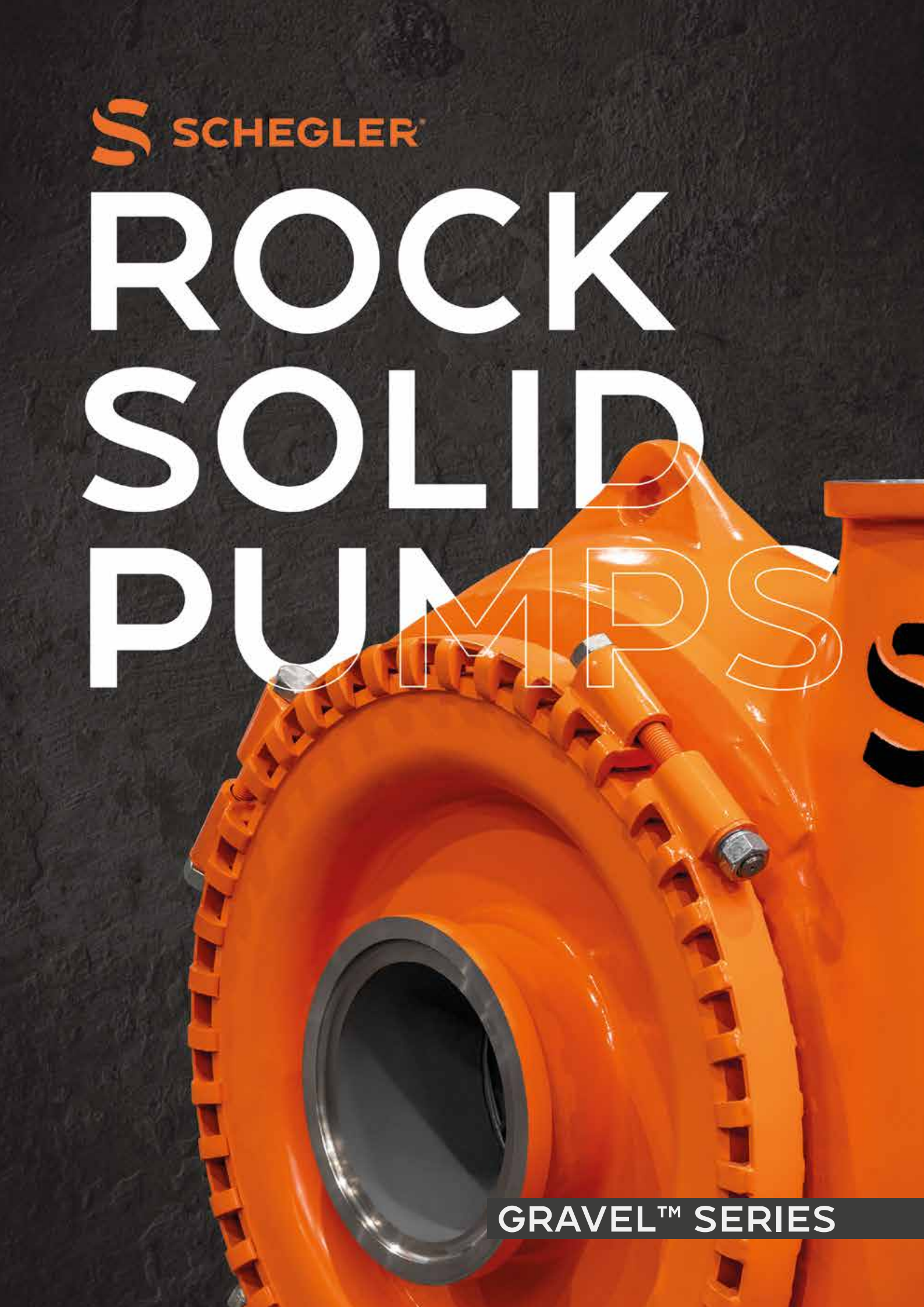

GRAVEL™ SERIES

SCHEGLER® ROCK SOLID PUMPS

Schegler offers a wide range of heavy-duty pump solutions to handle the most abrasive liquids in the most challenging conditions. Firmly anchored in the quarrying, mining, dredging, recycling, and industrial processing industries, Schegler continuously monitors, analyzes, and improves processes to offer targeted solutions to its clients.

Years of continuous improvement have led to Schegler's existing product range, offering the best slurry pumping technology available in the market. Yet, it's Schegler's strong belief that the customer comes first. That's why listening to the industry is the cornerstone of the company. Every opinion or improvement suggestion is of great value. In this way, Schegler can keep developing services and products trusted by everyone.

By setting high standards for and rigorously selecting its distributors, Schegler can provide unparalleled customer service. This trusted, well-organized distributor network guarantees quick response and short lead times, getting the necessary knowledge, workforce, and products on-site. Fast. That's the Schegler promise.





GRAVEL™ SERIES HORIZONTAL SLURRY PUMP

WE ENGINEERED THE GRAVEL™ SERIES TO NAVIGATE THE CHALLENGING TERRAINS OF HIGHLY ABRASIVE AND CORROSIVE SLURRIES CONTAINING LARGE SOLIDS, SIGNIFYING A SUBSTANTIAL ADVANCEMENT IN ROBUST SLURRY PUMPING SOLUTIONS

The Gravel series pumps specialize in efficiently handling abrasive slurries with large particles, combining continuous performance with minimized maintenance and ownership costs. These pumps are constructed robustly, with a modular design that not only facilitates easy maintenance but also ensures flexibility by offering wear components in various highly resistant alloys tailored to specific applications.

These pumps are designed for adaptability and can serve a wide range of demanding industries, including mining, tunneling, and dredging—even in underwater operations. Their lower NPSH requirement enhances their versatility, allowing them to meet various challenging pumping needs.

Overall, the Gravel series stands out for its operational efficiency and versatility across various applications. It promises exceptional performance with a focus on reducing the total cost of ownership, marking it as a reliable asset for industries dealing with abrasive and challenging pumping scenarios.

ROBUSTNESS & SUPERIOR SOLIDS HANDLING

Pivoting on two essential elements, robust construction and exceptional solids handling, the Gravel Series exemplifies durability. This sturdiness is especially critical when managing abrasive slurries containing large particles.

The series showcases a large solids passage facilitated by the robust, unlined design of the pump housing with substantial clearances, ensuring efficient and reliable transport of abrasive materials across various challenging industrial applications.

Maintenance is simplified in the Gravel Series, thanks to a unique segmented clamp ring. This feature provides effortless access to the wet-end parts for inspection and maintenance. What's more, it allows for quick casing rotation to any angle. As a result, users can adjust the pump effortlessly based on its application and the available space, minimizing operational downtime and associated costs.

The combination of its robust construction and unmatched solids handling capacity makes the Gravel Series a top choice for numerous demanding industrial scenarios. Its modular design facilitates easy parts replacement, streamlining the maintenance process.

In conclusion, the Gravel Series stands out as a trustworthy partner in the challenging world of slurry transport, delivering an optimal balance of durability, efficiency, and maintenance simplicity.

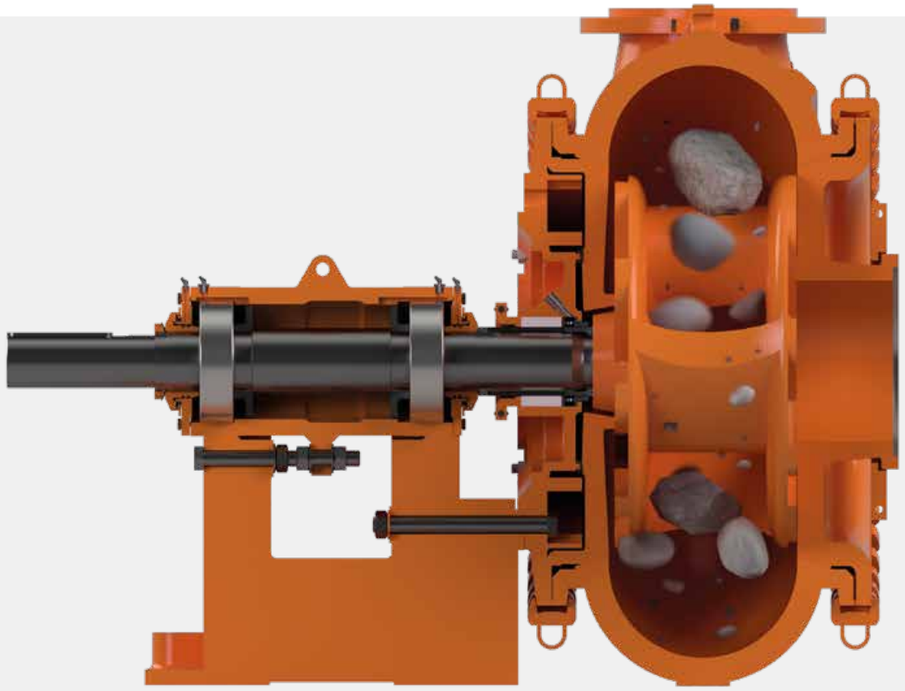



PARTS DIAGRAM

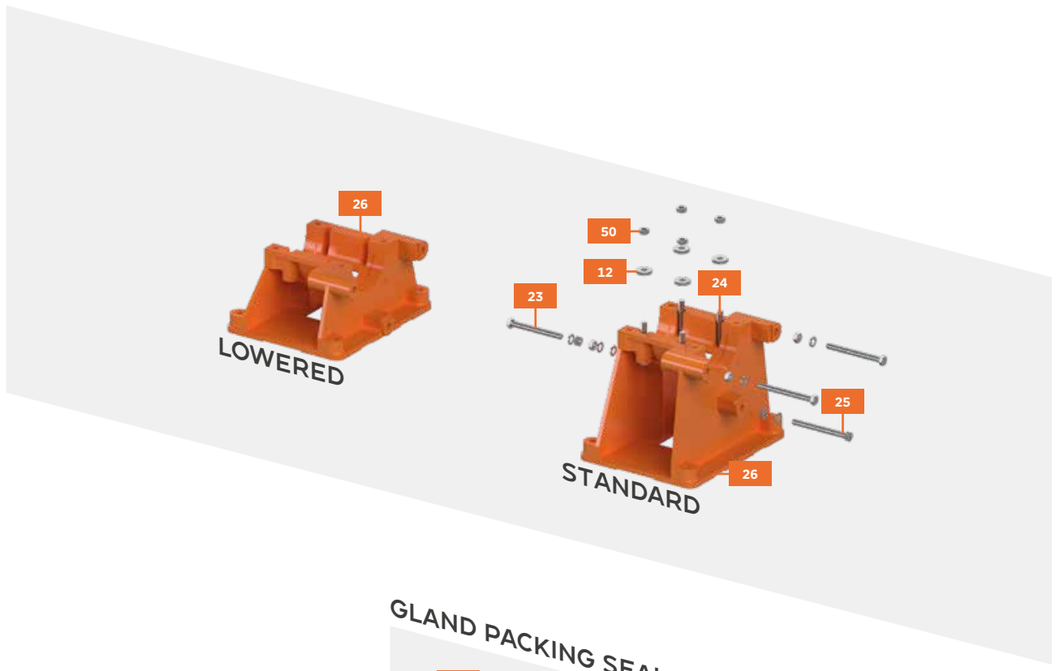



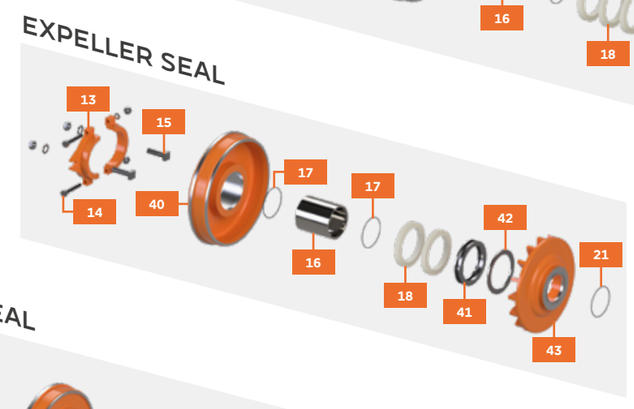

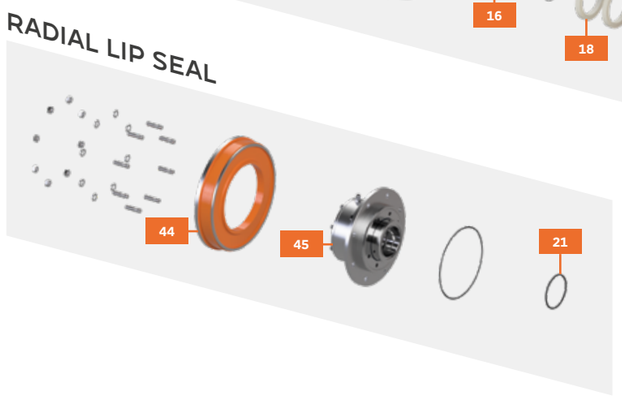

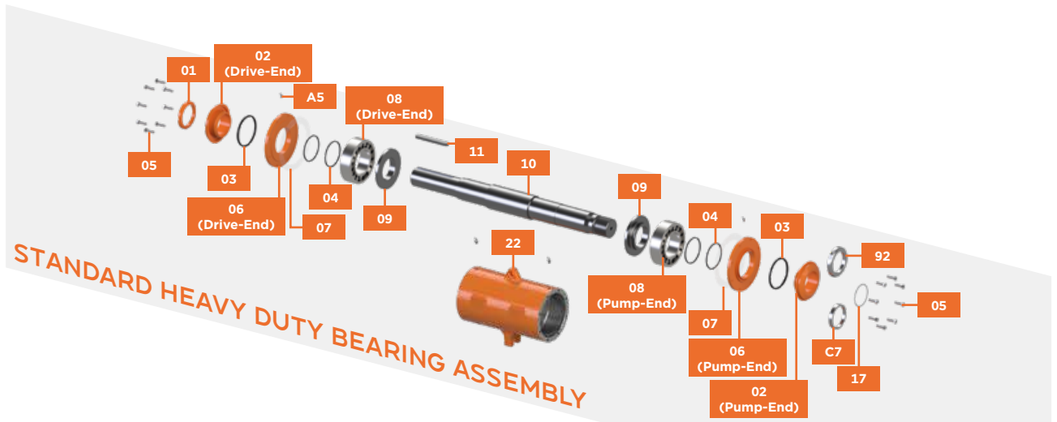

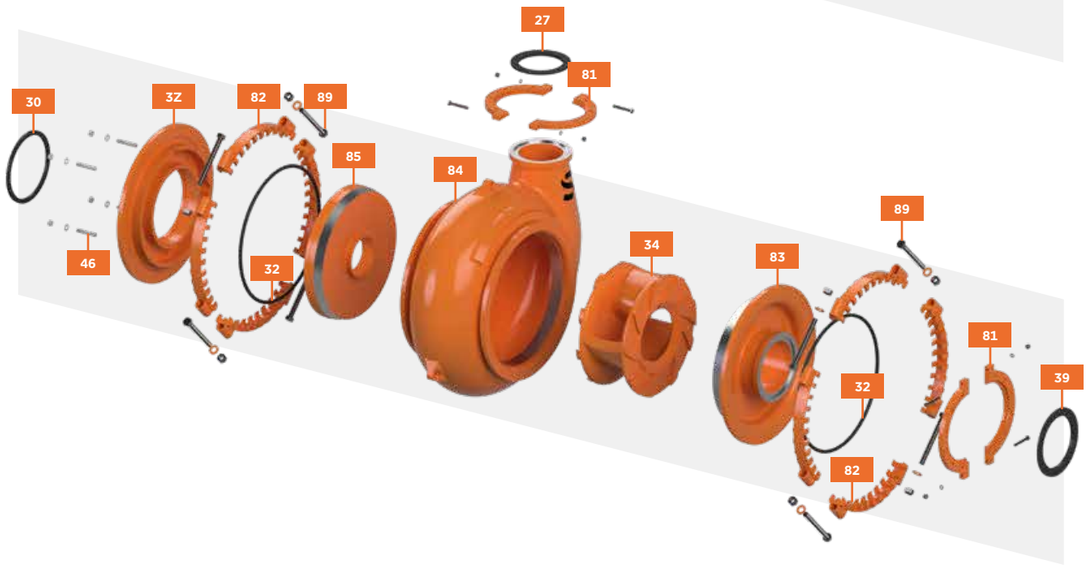

01	Labyrinth Lock Nut	14	Gland Clamp Bolt	27	Discharge Joint	50	Clamp Nut
02	Labyrinth	15	Gland Bolt	30	Stuffing Box / Expeller Ring Seal	81	Flange Ring
03	Bearing Seal	16	Shaft Sleeve	32	Bowl Seal	82	Clamp Ring
04	Piston Ring	17	Shaft Sleeve O-ring	34	Impeller	83	Door
05	End Cover Set Screw	18	Gland Packing	39	Intake Joint	84	Bowl
06	End Cover	19	Lantern Restrictor	40	Expeller Ring	85	Back Liner
07	Shimset	20	Shaft Spacer	41	Lantern Ring	89	Clamp Ring Bolt
08	Bearing	21	Impeller O-ring	42	Neck Ring	92	Impeller Release Collar
09	Grease Retainer	22	Bearing Housing	43	Expeller	3Z	Adaptor Plate
10	Shaft	23	Adjusting Screw	44	Radial Lip Seal Back Plate	C7	Spacer
11	Shaft Key	24	Clamp Bolt	45	Radial Lip Seal		
12	Clamp Washer	25	Adaptor Plate Stud	46	Back Liner Stud		
13	Gland Assembly	26	Base	49	Stuffing Box		

SEALING SYSTEMS

In a centrifugal slurry pump, the shaft drives the impeller. The concentric space between the shaft and the pump housing requires a seal to prevent leakage. The challenge is to contain this pressurized and often abrasive liquid. A sound functioning sealing system will prevent possible mechanical failure or contamination of the environment.

Schegler Gravel pumps are compatible with an arsenal of sealing systems for a wide variety of applications. However, the three key types of seals are gland packing, expeller seal, and radial lip seal systems. The table below compares the three main sealing systems for several key parameters.

Sealing system	Leakage when operating	Leakage when idle	Allowable suction pressure	Allowable discharge pressure	NPSHA	Water consumption	Maintenance frequency	Capital cost
Gland Packing	Medium	Low	High	High	Low	High	High	Low
Expeller	Low	Medium	Low	Low	High	Low	Medium	Medium
Radial Lip Seal	Low	Low	High	High	Low	Low	Low	High

GLAND PACKING SEAL

Gland packing is considered the traditional seal for centrifugal slurry pumps. The packing gland, a soft, rope-like packing, is placed around the shaft sleeve. This packing remains stationary against the stuffing box as the shaft rotates, ensuring a solid shaft seal.

However, it is essential to know that friction will wear down the packing and shaft sleeve over time. Although refitting the packing is easy, this system is subject to maintenance. A modification of the gland packing seal is the flushed gland. Here, clean liquid is flushed through the gland packing into the pump, minimizing leakage and keeping the sealing system cool. Although regular inspection and proper maintenance are required, gland packing is a widely used method proven to be successful in various applications.



EXPELLER SEAL

The expeller seal is a hydrodynamic sealing system. This rotary expeller (often combined with pump-out vanes on the back of the impeller) is mounted behind the impeller and driven by the rotating shaft. This method reduces the hydraulic pressure at the shaft, creating a powerful expelling force that moves liquid away from the shaft towards the expeller ring.

This active sealing method has several significant advantages. The major advantage of the expeller seal is that leakage is virtually reduced to zero when the pump is running. Attention must be paid to the pump's operating speed and suction pressure to ensure optimum operation. During idleness, additional gland packing minimizes any leakage from the pump.

Other advantages of the expeller seal are that it is less subject to maintenance, and no sealing liquid is necessary. This makes the expeller seal the most commonly used sealing method in slurry pumps.



RADIAL LIP SEAL SYSTEMS

Radial Lip Seal Systems, such as Liquidyne® or VR® seals, represent modern sealing solutions predominantly employed in heavy-duty pump applications. The system utilizes water-lubricated lip seals that traverse over a partially grooved bush situated on the pump shaft, establishing a water flow between the grooves and the lip seal, minimizing leakage. Its robust design enables this system to handle severe shocks, vibrations, and abrasive media, ensuring a reliable shaft seal. The predictable lifetime, lower maintenance frequency, and condition monitoring feature add to its reliability and operational security, making it a viable alternative to traditional gland packing or mechanical seals in demanding pumping scenarios.

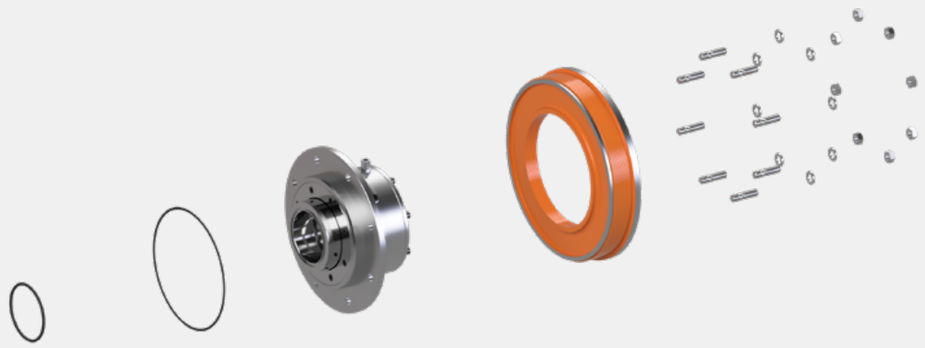

Trademark names Liquidyne® and VR® mentioned herein are the property of Lagersmit and VR Dichtungen respectively.
No affiliation or endorsement by these companies is implied.

DRIVE SYSTEM

All Gravel pumps come fitted with heavy-duty grease or oil lubricated tapered-roller bearings as standard. Together with the shaft, they form the cartridge-style bearing assembly. They are sealed by a labyrinth seal, which provides a unique barrier preventing contaminants' ingress. The usage of grease retainers reduces lubricant consumption and improves maintenance intervals.

The mass of Gravel's heavy-duty impellers combined with dense fluids causes radial forces on the system. Short impeller overhang and large shaft diameters minimize these radial impeller deflections. An additional positive impact of this design is drastically reduced stress on the bearing and sealing system.

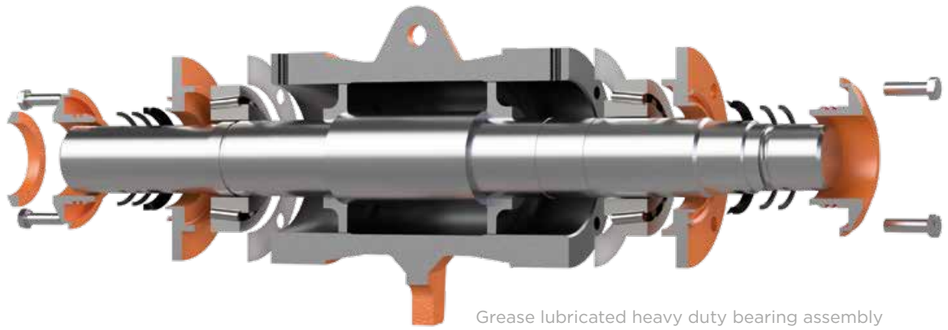

Grease lubricated heavy duty bearing assembly

DID YOU KNOW THAT 90% OF BEARING FAILURE IN SLURRY PUMPS IS CAUSED BY IMPURITIES PENETRATING THE BEARING ASSEMBLY? GRAVEL'S DESIGN, IN COMBINATION WITH FREQUENT LUBRICATION OF THE LABYRINTHS, SIGNIFICANTLY REDUCES THIS RISK, ENSURING MAXIMUM LIFETIME.

The bearing cartridge is equipped with superior quality tapered-roller bearings. This contributes to a perfectly balanced, reliable bearing assembly. Axial displacement of the complete cartridge enables an easy clearance adjustment between the impeller and liner on the suction side. Depending on the application and the size of the pump, the Gravel can be equipped with an extra heavy-duty bearing assembly to withstand higher motor powers.

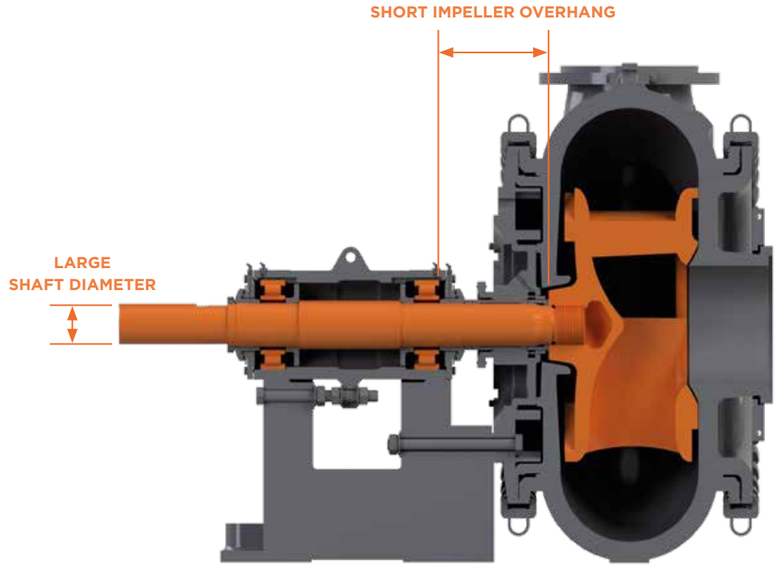

Furthermore, a highly robust frame houses all the bearing assemblies and comes in two variants. Firstly, the standard frame stands as the highest format. Secondly, a lowered frame is also available for those seeking a reduced height in their pump setup, for example, in a ship's engine room. Most pump installations can seamlessly utilize the standard base design, but specific applications may require a low base design with reduced height. These two frame options underscore Schegler's commitment to providing flexible solutions tailored to different operational setups' diverse needs and spatial constraints.



Standard base



Lowered base



SUBMERSIBLE BEARING ASSEMBLY

Gravel pumps can be fitted with an optional submersible bearing assembly, boosting performance and reliability for underwater tasks like dredging. This assembly is securely sealed with lip or mechanical seals on both the pump and drive-end sides, creating a watertight environment. It connects to dual oil compensators—one for shaft seal oil and another for internal chamber oil—maintaining higher pressure than the surrounding water to prevent ingress and contamination.

Integrated sensors continuously monitor the system's oil levels and pressure to ensure the bearing assembly's durability and stable performance. Additionally, each bearing in the block can be monitored by a vibration sensor, providing immediate data on the bearing system's condition, which is vital for detecting and addressing issues quickly to sustain peak performance.

Featuring an extra-heavy duty bearing block, this submersible bearing assembly represents a fusion of robust construction and advanced technology, setting a new standard for reliability and efficiency in demanding underwater pumping operations.

IMPELLER

Schegler's impellers are designed to cater to specific application demands while ensuring extended wear life. Available in multiple configurations and crafted from the highest quality materials, these impellers integrate seamlessly with your operational needs, delivering optimal performance without sacrificing durability.

Harness the power of cutting-edge computational fluid dynamics in Schegler impellers, featuring front vanes that resist recirculation and back vanes that diminish seal chamber pressure, substantially enhancing wear part longevity. The impellers' wide diameter and engineered low-speed operation minimize wear, making them uniquely enduring.



Front vanes

Large internal clearances

Back vanes

Schegler's high-efficiency closed impellers are a technological breakthrough, boasting a refined vane design and optimal fit that boost efficiency by up to 10%, translating to significant energy savings. While this design slightly adjusts solids handling, the energy cost benefits are compelling for high-power applications.

For challenges requiring robust solids handling, Schegler's impellers are designed with large internal clearances to pass solids effectively, maintaining high performance. No matter the complexity of your needs, Schegler's impeller range, characterized by its exceptional internal clearances and solid passage capabilities, stands ready to tackle any task with unmatched reliability and performance.

IMPELLER ADJUSTMENT

Wear between the impeller and door has the most significant impact on performance. Due to abrasion, the axial clearance will increase over time. Increased axial clearance forces solid particles to flow from high-pressure zones to low-pressure zones inside the pump. This effect speeds up wear and decreases the hydraulic efficiency of the pump.

Hence, it is essential to adjust the impeller regularly to keep the axial clearance to a minimum and limit further wear. Not only is efficiency during the wear cycle maintained, but it drastically improves the lifespan of the wet-end parts and the pump in general.

The impeller adjustment system of a Schegler Gravel pump is by far the most user-friendly system out there. All it takes to reduce axial clearance is to loosen the clamp bolts and drive the bearing cartridge towards the suction side by turning the nuts of the adjusting bolt. Impeller adjustment decreases wear and reduces maintenance and energy costs, ensuring the industry's best-in-class total cost of ownership.

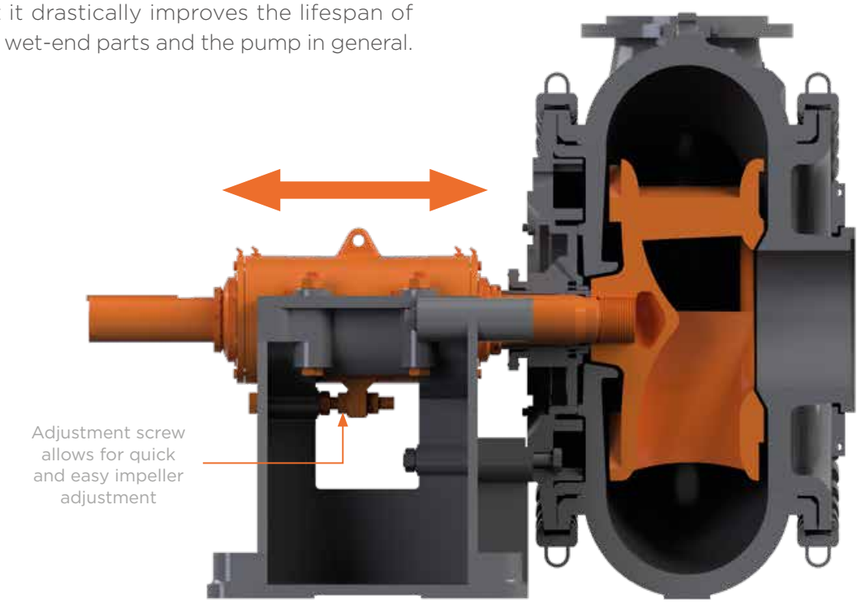

BEFORE ADJUSTMENT:

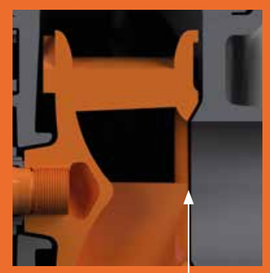

Increased axial clearance
due to wear

AFTER ADJUSTMENT:

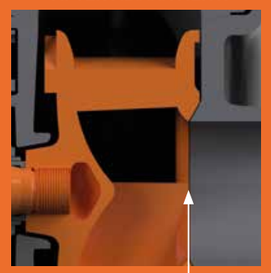

Impeller adjustment
reduces axial clearance

CASING DESIGN AND MATERIAL SELECTION



The Schegler Gravel series exemplifies a combination of thoughtful design and material choice to deliver optimal performance across the most challenging slurry applications. The Gravel pump features a robust ‘bowl’ casing with a concentric design, providing ample clearances to facilitate the passage of very coarse particles and gravel. This design is pivotal in enhancing the pump’s ability to handle abrasive materials efficiently.

Standardly, the bowl is crafted in high chrome, offering optimal resistance against wear, a crucial feature for extending the pump’s lifespan amidst abrasive conditions. Besides the standard high chrome execution, the bowl, the impeller, and other wet-end parts are available in various specific alloys. The availability of the bowl in different thicknesses further augments the pump’s adaptability, ensuring it can be tailored to meet the rigorous demands of various applications.

The Gravel series is distinctively unlined, a design choice that facilitates larger clearances, making it adept at handling abrasive slurries with very coarse particles and gravel. The materials for the bowl, impeller, and other wet-end parts are meticulously selected to ensure they withstand the harsh conditions inherent in slurry transport, thereby underlining the pump’s robustness and efficiency in such demanding environments.

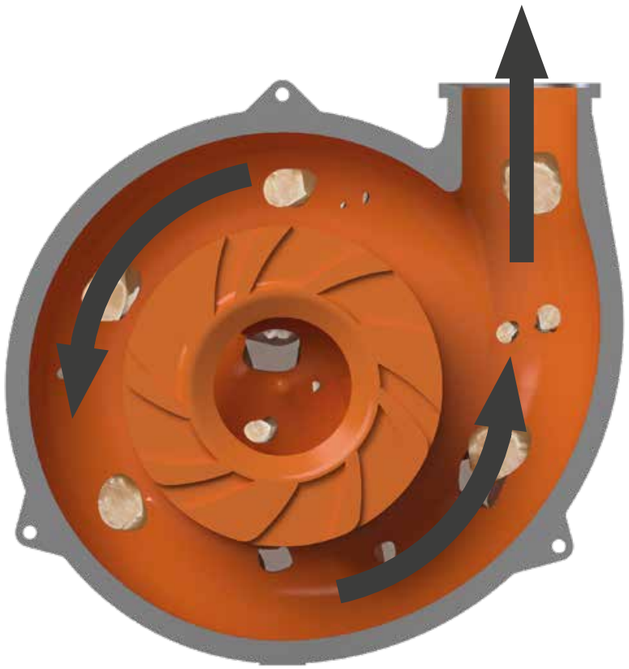

A robust ‘bowl’ casing with a concentric design, providing ample clearances to facilitate the passage of very coarse particles and gravel

Metals
High Chrome
Hastelloy
Ultra-High Chrome
Hyper Chrome

More material choices are available on request

Your Schegler distributor is well-equipped to advise on the most suitable configuration for your application, ensuring that the Gravel pump is tailored to your needs. Whether it’s varying the thickness of the bowl or selecting a particular alloy for the wet-end parts, the Gravel series showcases a level of adaptability geared towards delivering reliable performance tailored to the specific demands of your application.

MOTOR CONFIGURATIONS

The drive configuration of a slurry pump hinges on various factors, including available space, slurry properties, capacity, and maintenance needs. The Gravel series predominantly employs a direct drive (CD) coupling to a motor. The motor can be coupled either directly or facilitated by a gearbox, a variable speed drive, or a combination thereof to achieve the desired rotational speed and operating point, catering to the needs of various demanding applications. This configuration is pivotal in ensuring efficiency, potentially translating to substantial energy cost savings, which is crucial given the high-power demands.

The direct drive (CD) configuration is notable for its high efficiency, low failure rate, and absence of speed loss, making it particularly suited for applications with more considerable motor powers. Typical Gravel pump applications such as tunneling skids, certain booster stations, and underwater pumps on dredger vessels are better suited for the direct drive variant. Underwater applications, in particular, solely rely on direct drive configuration.

On the other hand, belt-driven pump configurations (CT, CB, CR, CL, and CS) provide flexibility to adapt to workflow changes and specific site and maintenance requirements by allowing speed adjustments through v-belt pulley replacements. This setup absorbs vibrations, thus extending motor life, and enhances safety through v-belt slippage during overloads.

Your Schegler distributor is ready to assist in finding the right solution for your pumping challenge, considering the pump, motor speed, and overall system requirements.

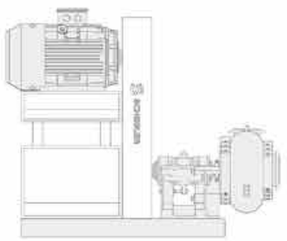

CB

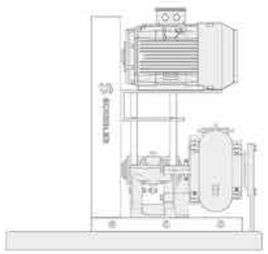

CS

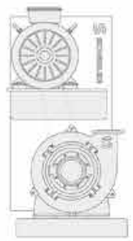

CT

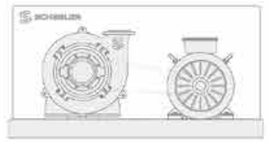

CL



CD

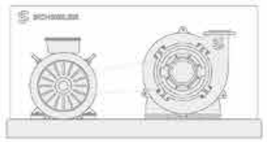

CR

CB **Back Top Mount:** When the selected motor is too large to be top-mounted (CT)
CS **Sliding Base Top Mount:** Same benefit as CT, with extra serviceability
CT **Top Mount:** When speed can be variable, and floor space is limited
CL **Left Side Mount:** When speed can be variable, and above ground space is limited
CD **Direct Drive Mount:** When speed is fixed and sufficient ground area is available
CR **Right Side Mount:** When speed can be variable, and above ground space is limited

DISCHARGE POSITIONS

Schegler Gravel pumps are engineered for exceptional adaptability, offering versatile discharge outlet positioning with eight possible orientations for both right (D000 standard) and left-hand (L000 standard) rotating pumps. This flexibility is attained by a rotatable pump housing in 45° increments, requiring no structural alterations. Addressing varied operational needs, Schegler also provides left-hand rotating pump options, ensuring a perfect fit for specific configurations and spatial limitations.



Moreover, altering the discharge outlet's standard position can optimize the wear life of the liners and impeller, particularly in cases where gravitational pull may hinder particle outflow and increase recirculation and wear. A strategic rotation of the pump housing can significantly prolong wear part durability. Some applications may even favor a bottom-oriented discharge outlet for improved drainage and impeller efficiency.

Demonstrating Schegler's dedication to customer-centric innovation, these Gravel series pumps adapt to a myriad of scenarios, delivering top-notch performance and wear reduction, thus ensuring one of the lowest total ownership costs in the industry. This commitment not only responds to the unique requirements of various operational environments but also emphasizes the brand's promise to reduce maintenance costs and enhance overall value for users.

BOOSTER STATIONS

In operations involving heterogeneous slurry mixtures, maintaining an appropriate velocity is essential to prevent sedimentation. Centrifugal slurry pumps arrayed in a series configuration are adept for longer distance or elevated slurry transfers, particularly when the application's pressure needs exceed the capability of a standalone pump. In these instances, the employment of mobile booster stations enhances performance.

Booster stations come in various configurations, such as modular containerized units that house motors, electric junction boxes, and frequency drives for enhanced transportability and adaptability. Another typical setup is the tunneling skid system, where sequential pump sleds propel the slurry to a separation plant, efficiently processing the excavated material and allowing for the recirculation of bentonite in the drilling operation.



Containerized booster station

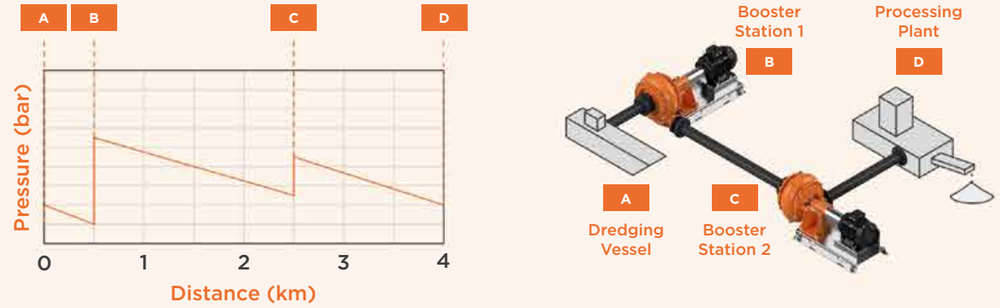

Simplified example of a booster setup at an aggregates plant

The integration of booster stations not only amplifies throughput but also boosts the system's efficiency—critical for operations involving high motor power. Despite the more significant initial expenditure due to the necessity of multiple pumps, the operational efficiencies, coupled with reduced wear rates from lower running speeds, justify the investment through substantial energy savings.

Your Schegler representative will guide you through selecting the most efficient booster station configuration, ensuring your system operates at peak performance.



Simplified example of a booster setup inside a tunnel boring operation

DIMENSIONS

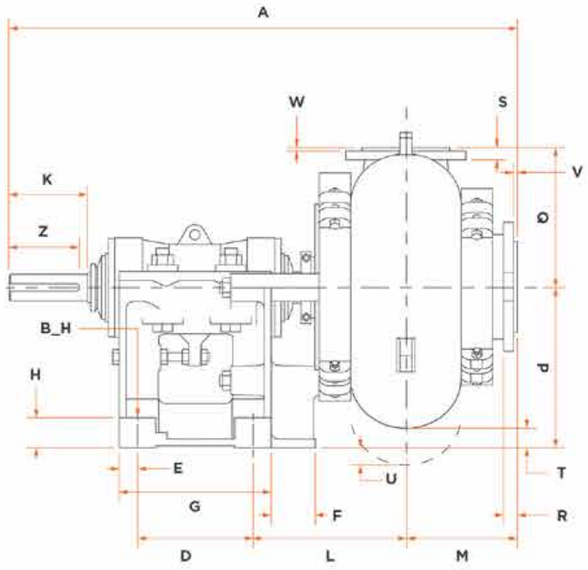

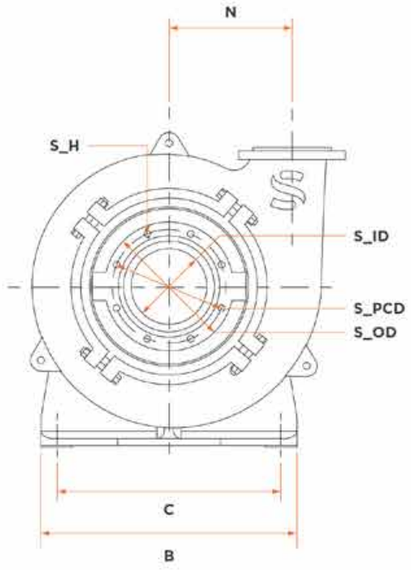

DISCHARGE FLANGE

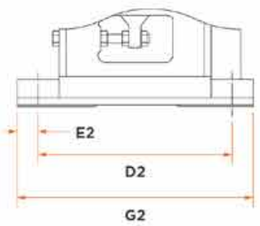

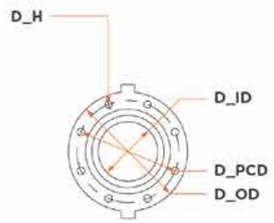

SHAFT

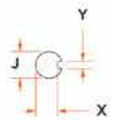

Size	Frame	A	B	C	D	D2	E	E2	F	G	G2	H	P	B_H
Gr6x4	F3	1006	492	432	213	/	38	/	75	289	/	64	330	4x22
Gr8x6	F4	1286	622	546	257	/	54	/	83	365	/	76	457	4x29
Gr10x8	F5	1591	857	762	349	/	67	/	124	485	/	98	610	4x35
Gr12x10	F6	2010	1207	851	/	749	/	63	/	/	876	152	851	4x41
Gr14x12	F6	2090	1207	851	/	749	/	63	/	/	876	152	851	4x41
Gr18x16	F6	2114	1207	851	/	749	/	63	/	/	876	152	851	4x41
Gr20x18	F7	2769	1397	1194	/	921	/	102	/	/	1124	222	1067	4x67
Gr24x20	F7	2861	1397	1194	/	921	/	102	/	/	1124	222	1067	4x67
Gr28x24	F7	2845	1397	1194	/	921	/	102	/	/	1124	222	1067	4x67

		SHAFT					SUCTION FLANGE				DISCHARGE FLANGE			
Size	Frame	J	K	X	Y	Z	S_H	S_ID	S_PCD	S_OD	D_H	D_ID	D_PCD	D_OD
Gr6x4	F3	65	164	58	18	152	8x19	152	260	305	4x19	102	210	254
Gr8x6	F4	80	222	71	22	203	8x19	203	324	368	8x19	152	260	305
Gr10x8	F5	100	281	90	28	232	8x22	254	406	457	8x19	203	324	368
Gr12x10	F6	140	356	128	36	270	12x22	305	470	527	8x22	254	406	457
Gr14x12	F6	140	356	128	36	270	8x22	356	495	552	12x22	305	470	527
Gr18x16	F6	140	356	128	36	270	16x25	457	641	705	12x25	406	584	640
Gr20x18	F7	180	406	165	45	356	12x29	508	699	762	16x25	457	641	705
Gr24x20	F7	180	406	165	45	356	16x29	610	756	825	12x29	508	699	762
Gr28x24	F7	180	406	165	45	356	20x32	711	902	972	20x29	610	844	908

Size	Frame	M	N	Q	R	S	V	W	L	T	U	Weight (kg)
Gr6x4	F3	203	260	343	33	32	8	5	330	16	/	459
Gr8x6	F4	293	352	412	42	40	6	8	392	54	/	1117
Gr10x8	F5	330	416	533	48	41	8	6	487	60	/	2235
Gr12x10	F6	373	522	673	54	55	10	8	437	238	/	4439
Gr14x12	F6	424	610	787	54	55	10	8	502	121	/	5361
Gr18x16	F6	441	692	921	64	64	10	10	509	/	73	6930
Gr20x18	F7	559	914	1067	64	64	10	10	613	41	/	11794
Gr24x20	F7	597	1029	1251	64	64	10	10	768	/	117	14515
Gr28x24	F7	607	1219	1378	64	108	10	10	778	/	419	19051

Contact your Schegler distributor for dimensions of other pump configurations. All dimensions are in millimeters.
Dimensions are for reference only.

FAMILY CURVES

The curves below show pump performance with clean water. The curves should only be used to make a primary selection. Ask your Schegler distributor for detailed specification sheets per model.

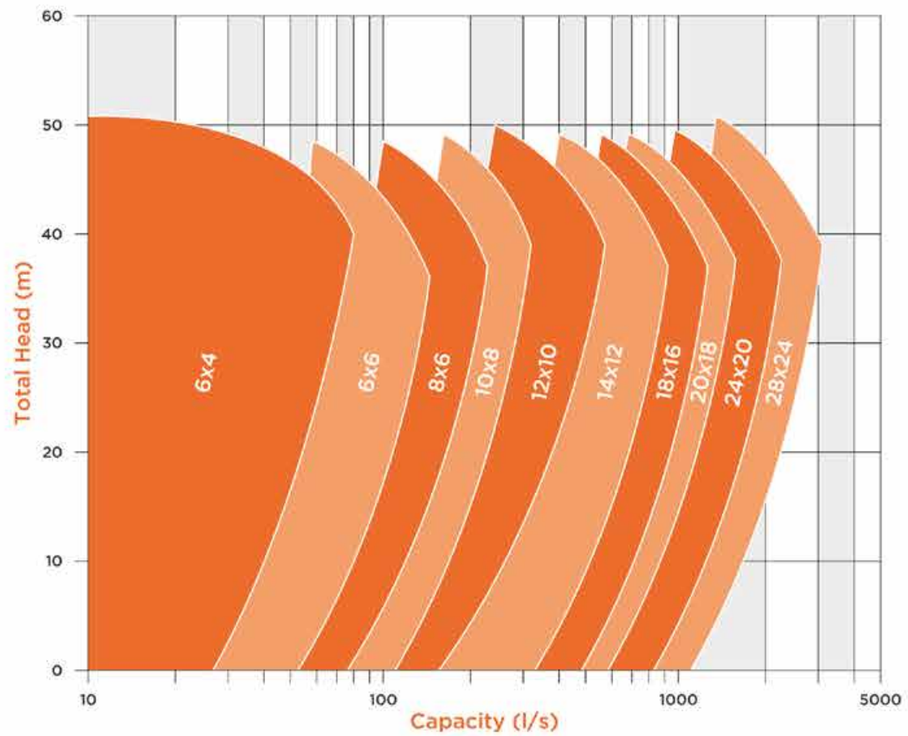

SCHEGLER®

This brochure is offered to you by
your local partner: