Brayston®

SEALING SOLUTIONS

Mechanical seals for slurry pumps



Cartridge seals, barrier fluid systems and elastomer bellow seals.

Brayston® mechanical seals keep slurry and process water where they belong. The cartridge seals fit Schegler® slurry pumps directly, and Brayston® barrier fluid vessels and the standalone thermosyphon feeding system supply them with clean, pressurised barrier fluid.

24 bar	Ø50–220 mm	12 / 20 L	Ø10–100 mm
Max. pressure, double seal	Cartridge seal shaft sizes	Barrier fluid vessels	BBS elastomer bellow seals

A product line of vaikon

www.vaikon.com/brayston-mechanical-seals

info@vaikon.com · +32 493 05 02 66

Brayston® double mechanical seal

Two seals in one cartridge with a barrier fluid between them: the slurry never reaches the seal faces and nothing leaks to the environment. The cartridge is supplied pre-assembled: slide it onto the shaft, fix it to the seal chamber and set it with the setting clips.

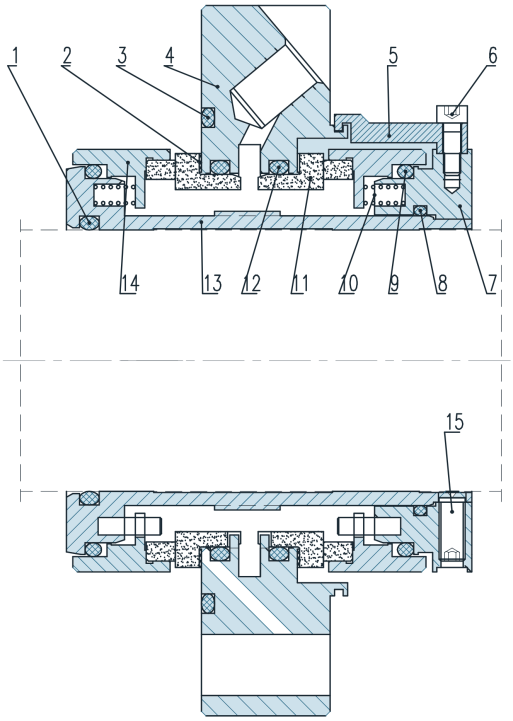

Section through a Brayston® cartridge double mechanical seal (shaft Ø60 mm)

01 O-ring	02 Gasket	03 O-ring
04 Gland	05 Setting clip	06 Screw
07 Collar	08 O-ring	09 O-ring
10 Spring	11 Stationary ring	12 O-ring
13 Shaft sleeve	14 Rotary units	15 Screw



Seal arrangements on Schegler® pumps

Code	Seal arrangement
SD	Brayston® double mechanical seal
SZ	Hi-seal Brayston® double mechanical seal
SDE	Brayston® double mechanical seal with enlarged-opening frame plate liner insert
SDU	Brayston® unpressurised double mechanical seal (API Plan 52)

Many more materials and types are available on request; the ones shown here are the most used in practice.

Design features and benefits

Design feature	Customer benefit
Two seals with a pressurised barrier fluid between the faces, up to 24 bar	The slurry never reaches the seal faces: no leakage, running or idle
Hard seal faces in tungsten carbide, silicon carbide or sintered silicon carbide; carbon on request	Resistant to abrasive slurry
Increased radial clearances and a multi-spring design	Constant face load and a longer seal life
Pre-assembled cartridge with setting clips	Fast and correct installation
Metal parts in 316, 316L, duplex 2205, Alloy 255 or Alloy C276	Resistant to corrosive and acidic slurries
Shaft sizes from 50 up to 220 mm	One seal concept for small and large Schegler® Vigor™ pumps

Double seal: materials and sizes

Material sets

Series	Seal faces	Metal parts	Elastomers
579	TuC / TuC	316	EPDM
B57	TuC / TuC	316L	FFKM
C57	SiC / SiC	316L	FFKM
A57	SSiC	Duplex 2205	FKM
C58	SSiC	Duplex 2205	FFKM

TuC = tungsten carbide · SiC = silicon carbide · SSiC = sintered silicon carbide.

Many more materials and types are available on request; the ones shown here are the most used in practice.

Shaft sizes and Schegler® Vigor™ pumps

Shaft	Size code	Schegler® Vigor™ pumps
50 mm	.1	Vi1.5×1, Vi2×1.5
60 mm	.2	Vi3×2, Vi4×3-F2
85 mm	.3	Vi4×3-F3, Vi6×4-F3
100 mm	.4	Vi6×4-F4, Vi8×6
Up to 220 mm	—	Larger pumps, on request

Seal code

Series · 000 · shaft size code · L · 45. Example: 579.000.2.L.45 = TuC/TuC, 316, EPDM for a 60 mm shaft.

Specifications

Shaft size	**Ø50 up to 220 mm**
Seal faces	**TuC, SiC, SSiC, carbon**
Elastomers	**EPDM, FKM, FFKM, NBR, TFE/P**
Metal parts	**316, 316L, duplex 2205 (1.4462), Alloy 255, Alloy C276**
Max. pressure	**24 bar**
Sealing plans	**API Plan 53 (pressurised) · API Plan 52 (SDU, unpressurised)**

Installation checks

- Shaft outer diameter within ± 0.05 mm
- Radial clearance below 0.1 mm
- Axial clearance below 0.13 mm
- Seal chamber face run-out below 0.5 µm/mm
- A fluid seal can be obtained on the stuffing box face
- No sharp edges or burrs where the sleeve O-ring slides over
- **Keep all plugs and openings of a double seal covered until they are connected: dirt otherwise enters the seal chamber.**

Barrier fluid vessel position

The vessel is mounted 0.6 to 2 m above the mechanical seal and at most 1 m to the side of it.

Unpressurised double seal (SDU)

The Brayston® 648 series is a balanced double cartridge seal that separates the product side from the atmosphere side, without a pressurised barrier system. It runs to API Plan 52: an unpressurised buffer fluid circulates between the outboard seal and a small reservoir, driven by a pumping ring while running and by thermosyphon at standstill.

- No pressurised barrier system or feeding unit needed
- The pumped medium does not leak directly to the atmosphere
- The pumped fluid is not contaminated by barrier fluid
- Tungsten carbide faces, FFKM O-rings, 316L housing

A pressurised system (API Plan 53, SD) gives more barrier fluid flow.

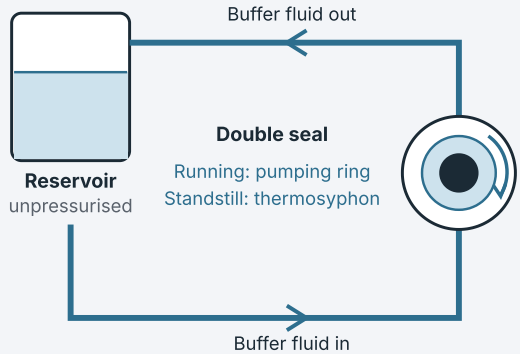

API Plan 52

Double seal in practice

A Schegler® Vigor™ 8×6 in duplex stainless steel at a zinc processing plant, on slurry up to 98 °C with a pH of 2. A Brayston® C58 double mechanical seal replaced the gland packing and removed the leakage path. A standalone thermosyphon feeding system and a 20 L barrier fluid vessel keep the seal pressurised automatically.

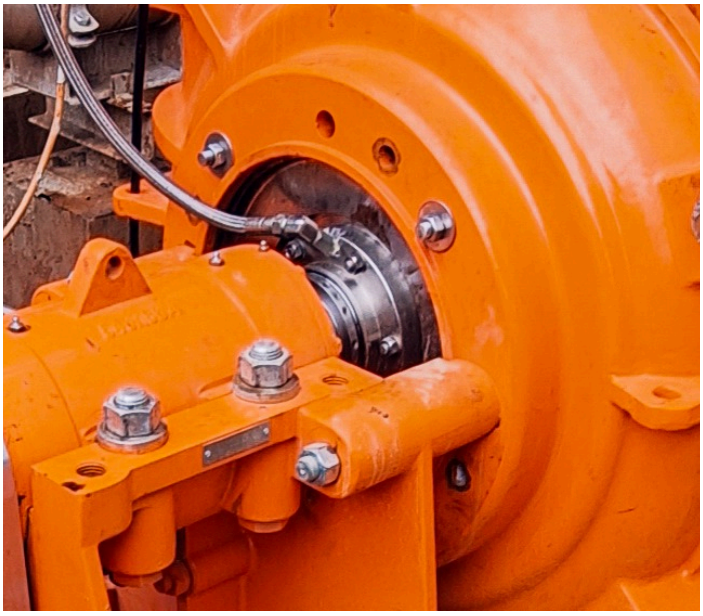

The Brayston® C58 double seal installed in the Vigor™ 8×6, with the barrier fluid line connected.

Retrofitting a double seal in three steps

1. **Medium**
   Check the chemical compatibility of the seal faces and holder. The temperature sets the thermosyphon set-up.
2. **Pressure**
   The pressure in the seal chamber sets the feeding unit. Brayston® double seals are rated up to 24 bar.
3. **Integration**
   Mount the vessel close to the pump so the barrier fluid circulates naturally, with pressure and level transmitters.

Longer seal life with SDE

Slurry can build up behind the frame plate liner insert of a double seal. The SDE arrangement uses an insert with an enlarged opening that keeps this area clear and significantly extends seal life.

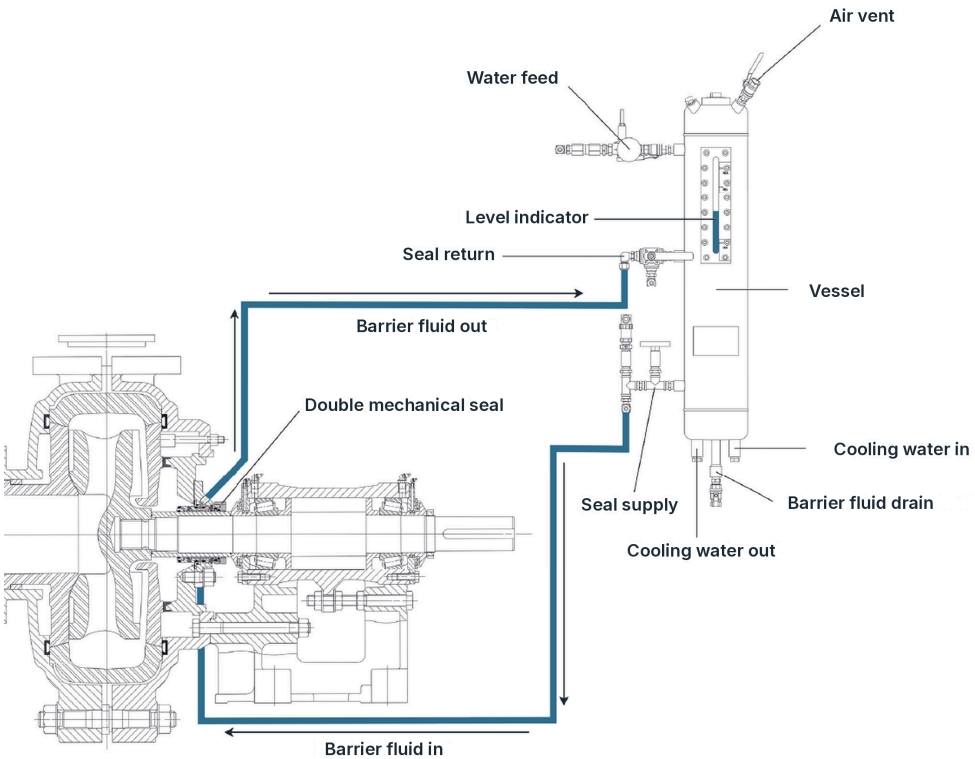

Schegler® Vigor™ pump with a Brayston® double mechanical seal and thermosyphon barrier fluid vessel

Barrier fluid vessels and feeding systems



Brayston® barrier fluid vessels

Stainless steel vessels that keep the barrier fluid of a double mechanical seal at the right pressure and temperature. Supplied as a vessel or as a complete system with fittings, hoses and monitoring.

	12 L vessel	20 L vessel
Working volume	9 L	20 L
Material	304 stainless steel	304 stainless steel
Design temperature	−20 to 100 °C	−20 to 100 °C
Design pressure	0 to 1 MPaG	0 to 1 MPaG
Level indication	Level glass	Level glass
Cooling	Cooling spiral	—

Complete barrier fluid systems

	PN10	PN16
Max. set pressure	8 barg	15 barg
Max. design pressure	10 barg	15 barg
Min. working pressure	1 barg	1 barg
Temperature	0 to 80 °C	0 to 80 °C

Pressurised with water or air · 12 or 20 L · analog or analog + digital monitoring

Includes: feed and return hoses, stainless steel swivel connections, pressure reducing valve, in-line filter, drain valves. Analog + digital: pressure and temperature sensor, flow control and liquid level probe.

Accessories: vessel stands (standard, short, adjustable), pressure relief valve, hand air pump, vent and water feed assemblies, upgrade kit from analog to analog + digital.

Standalone thermosyphon feeding system

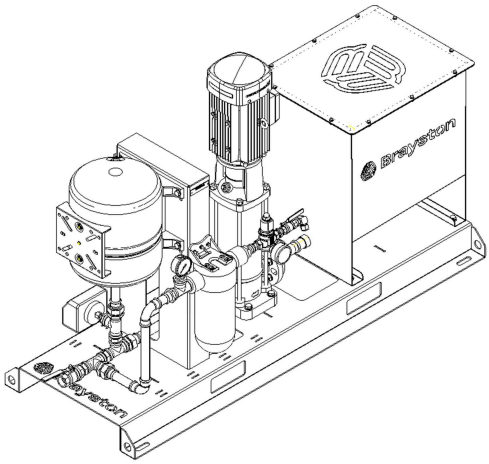

A compact skid that feeds the thermosyphon vessels and seals with clean water at the right pressure, from an IBC or a local water supply.

- Atmospheric buffer sump with float valve
- Multistage pump 3 × 400 V with pressure switch (on 8 bar, off 10 bar)
- PN10 pressure vessel 24 L: fewer pump starts
- Adjustable pressure reducing valve for each seal and vessel combination
- Filter: no particles reach the mechanical seal
- Out: 12 mm swivel for one vessel and seal; up to 4 vessels on request

Variants STFS-R1-P10-40, STFS-R1-P16-40 and STFS-R2-P16-100. CE according to the Machinery Directive 2006/42/EC.

Brayston® single mechanical seal

A stationary part on the pump casing and a rotating part on the shaft sleeve: the continuous contact between the two seal faces keeps the process fluid in the pump. Simple and cost-effective, and easy to install and maintain, provided the operating conditions stay within its limits.

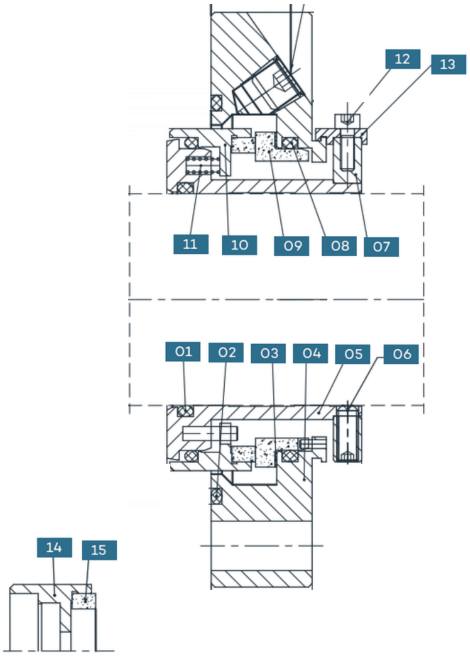

Section through a Brayston® single mechanical seal (shaft Ø60 mm)

- 01 O-ring
- 02 O-ring
- 03 Gasket
- 04 Gland
- 05 Shaft sleeve
- 06 Screw
- 07 Collar
- 08 O-ring
- 09 Seat
- 10 Rotary units
- 11 Spring
- 12 Screw
- 13 Setting clip
- 14 Rotary carrier
- 15 Rotary ring

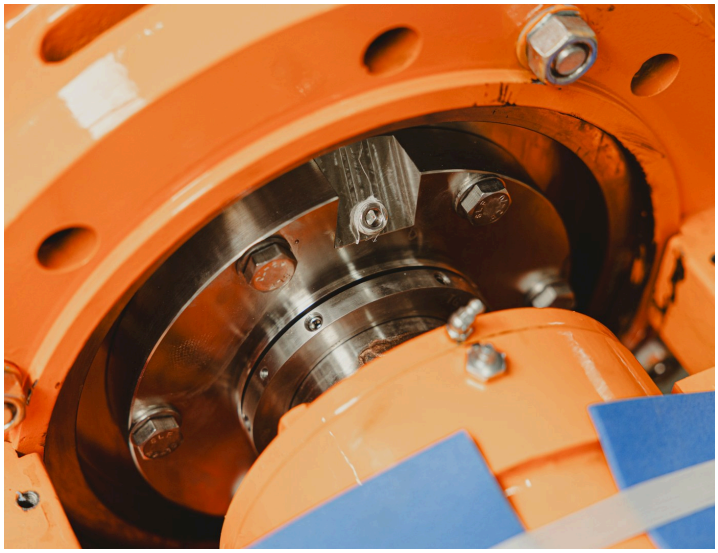

Brayston® single mechanical seal installed in a Schegler® Vigor™ 6×4.

Seal arrangements on Schegler® pumps

Code	Seal arrangement
SS	Brayston® single mechanical seal
SU	Hi-seal Brayston® single mechanical seal

Many more materials and types are available on request; the ones shown here are the most used in practice.

Single or double?

Choose a single seal for

- A lower initial investment
- Easy installation and maintenance
- No barrier fluid system

Choose a double seal for

- High pressure, high temperature or highly abrasive fluids
- Hazardous or corrosive media where nothing may leak
- Longer seal face life thanks to hydraulic balancing

In practice: hot slurry up to 90 °C

At a soil remediation site, a Schegler® Vigor™ 6×4 with a Brayston® single mechanical seal pumps process fluid up to 90 °C, with stable sealing under fluctuating suction conditions.

Every single seal leaves with a steel blind plug in the flush connection, not a plastic cap.

Brayston® Bellow Seals (BBS)

Single mechanical seals with an elastomer bellow, for shaft diameters from 10 to 100 mm. Four lengths and several stationary seats make the BBS series fit a wide range of pumps.



Lengths

BBS (L3) · **BBS-K** (L31) · **BBS-N** (L33) · **BBS-S** (L32)

Stationary seats

C01 / C01A
O-ring mounted, standard flush-mount / flanged-retained

Cup mounted
Seat in an elastomer cup

C06 / C06A
O-ring mounted with anti-rotation pin, according to DIN 24960

> **Many more materials and types are available on request; the ones shown here are the most used in practice.**

Dimensions (mm)

d	D3	L3	L31	L33	L32
10	22.5	14.5	25.9	25.0	33.4
12	25.0	15.0	25.9	25.0	33.4
14	28.5	17.0	28.4	25.0	33.4
15	28.5	17.0	28.4	25.0	33.4
16	28.5	17.0	28.4	25.0	33.4
18	32.0	19.5	30.0	25.0	37.5
19	37.0	21.5	30.0	25.0	37.5
20	37.0	21.5	30.0	25.0	37.5
22	37.0	21.5	30.0	25.0	37.5
24	42.5	22.5	32.5	25.0	42.5
25	42.5	23.0	32.5	25.0	42.5
28	49.0	26.5	35.0	33.0	42.5
30	49.0	26.5	35.0	33.0	42.5
32	53.5	27.5	35.0	33.0	47.5
33	53.5	27.5	35.0	33.0	47.5
35	57.0	28.5	35.0	33.0	47.5
38	59.0	30.0	36.0	33.0	46.0
40	62.0	30.0	36.0	33.0	46.0

d	D3	L3	L31	L33	L32
42	65.5	30.0	36.0	41.0	51.0
43	65.5	30.0	36.0	41.0	51.0
45	68.0	30.0	36.0	41.0	51.0
48	70.5	30.5	36.0	41.0	51.0
50	74.0	30.5	38.0	41.0	50.5
53	78.5	33.0	36.5	41.0	59.0
55	81.0	35.0	36.5	41.0	59.0
58	85.5	37.0	41.5	41.0	59.0
60	88.5	38.0	41.5	41.0	59.0
65	93.5	40.0	41.5	49.0	69.0
68	96.5	40.0	41.2	49.0	68.7
70	99.5	40.0	48.7	49.0	68.7
75	107.0	40.0	48.7	52.0	68.7
80	112.0	40.0	48.0	56.0	78.0
85	120.0	41.0	46.0	56.0	76.0
90	127.0	45.0	51.0	59.0	76.0
95	132.0	46.0	51.0	59.0	76.0
100	137.0	47.0	51.0	62.0	76.0

d = shaft diameter (h7) · D3 = outside diameter · L3/L31/L33/L32 = length BBS/BBS-K/BBS-N/BBS-S.

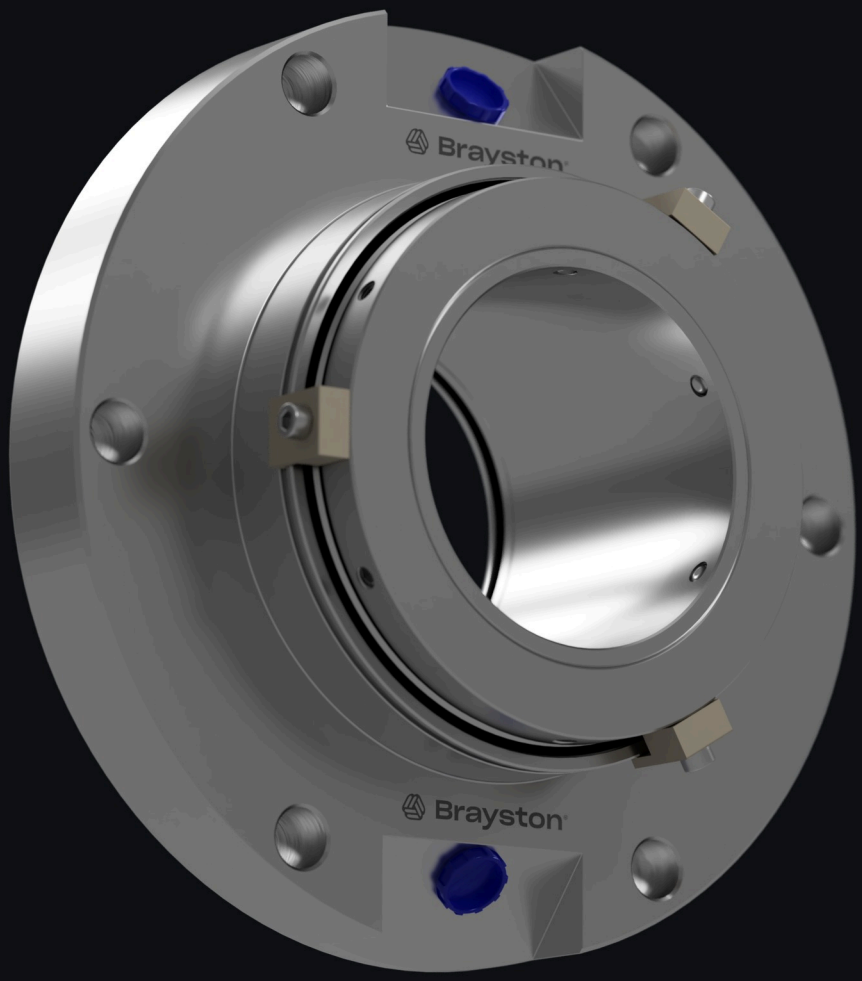

Brayston®

Seal your slurry pumps for good

Send us the pump, shaft size and duty. We select the seal, materials and barrier fluid system, and support you on site.

Request a quotation | **More information**

PHONE
+32 493 05 02 66

E-MAIL
info@vaikon.com

WEB
www.vaikon.com/brayston-mechanical-seals

Vaikon BV · Balendijk 205 · 3920 Lommel · Belgium
© 2026 Vaikon BV. Specifications may change without notice.

vaikon