KINAROX



RUBBER-LINED HORIZONTAL SLURRY PUMPS

Kinarox® Vita

rubber-lined slurry pumps

Soft natural rubber against abrasive and corrosive slurries. Kinarox® Vita pumps replace complete Linatex® Mark 3 (IIIR) pumps.

Distributed by

vaikon

A proven rubber-lined design, with parts and service from Vaikon

Kinarox® Vita is a horizontal slurry pump with liners and impeller in soft natural rubber. The pump fits the connections and footprint of Linatex® Mark 3 (IIIR) pumps, so you replace a complete pump without changing your pipework.

8
sizes, from 1.5×1.5 to 12×10 (inch)

38 Shore
natural-rubber liners and impeller

Dry gland
standard shaft seal, without gland water

4
discharge positions, to suit your installation

Why Kinarox® Vita

Replaces your Linatex® pump
Dimensionally interchangeable with Linatex® Mark 3 (IIIR) pumps: same connections and footprint.

Soft natural rubber
Liners and closed four-vane impeller in 38 Shore natural rubber. The rubber parts are interchangeable with Linatex® parts.

Dry gland seal
A rubber face seal running against a hard stationary face. No gland water, so the slurry is not diluted.

No separate flange gaskets
The rubber lining continues over the suction and discharge flanges and forms the gasket.

Flexible installation
BS4504 or ASA150 flange drilling, four discharge positions, belt-driven or direct coupled.

Parts from stock
Impellers, liners and dry gland service kits from our warehouse in Lommel.



Applications

Sand and gravel
Feeding sand and water to classification and dewatering.

Mineral processing
Mill circuits, hydrocyclone feed, concentrates and tailings.

Coal preparation
Dense-medium circuits, hydrocyclone feed and thickener underflow.

Chemical and effluent
Many acid or alkaline solutions at moderate temperatures, and effluent disposal.

Built around soft natural rubber

Natural rubber absorbs the impact of fine and medium particles instead of wearing away. The rubber parts are the wear parts; the rest of the pump is built for a long life.

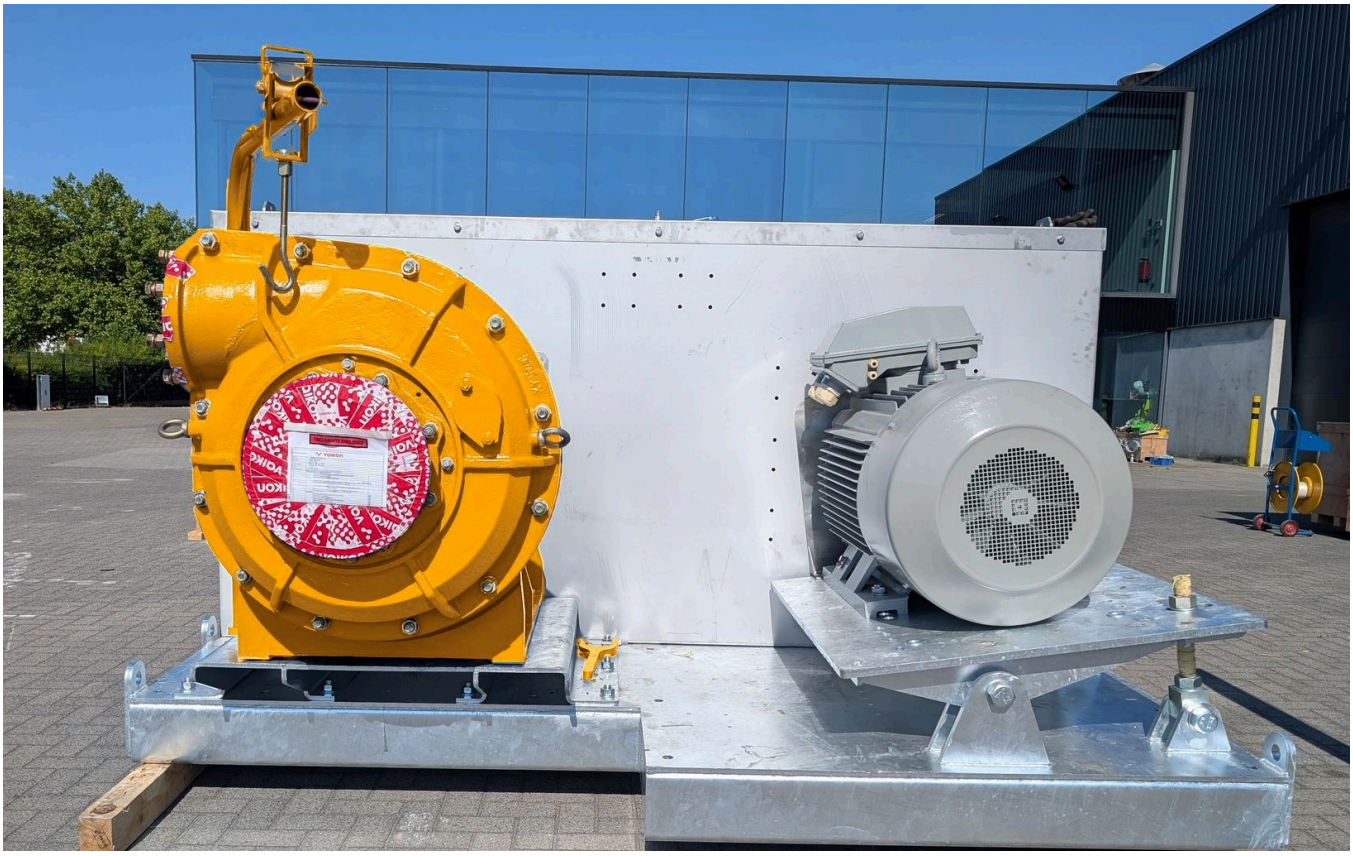

Kinarox® Vita 10×8 with base frame, belt guard and motor.

Impeller	Closed four-vane impeller in 38 Shore natural rubber, with pump-out vanes at the back to reduce the pressure at the gland.
Liners	Suction side and gland side liners in 38 Shore natural rubber. The lining continues over the flanges and forms the flange gasket.
Shaft seal	Dry gland as standard. A hydrostatic or packed gland is available for duties where a dry gland is not suitable.
Bearing assembly	Heavy-duty bearing assembly, grease lubricated.
Connections	Suction and discharge flanges with BS4504 or ASA150 drilling. Connect with flat-faced flanges.
Discharge position	The discharge can be turned to four positions.

Supplied the way you need it

- ✓ **Bare shaft pump**
- ✓ **Belt-driven, with the motor mounted above the pump**
- ✓ **Direct coupled**
- ✓ **With base frame, belt guard and motor**

Performance range

Flow rate and head per size, on clear water. Use the chart for a first selection; we confirm the size and speed for your duty.

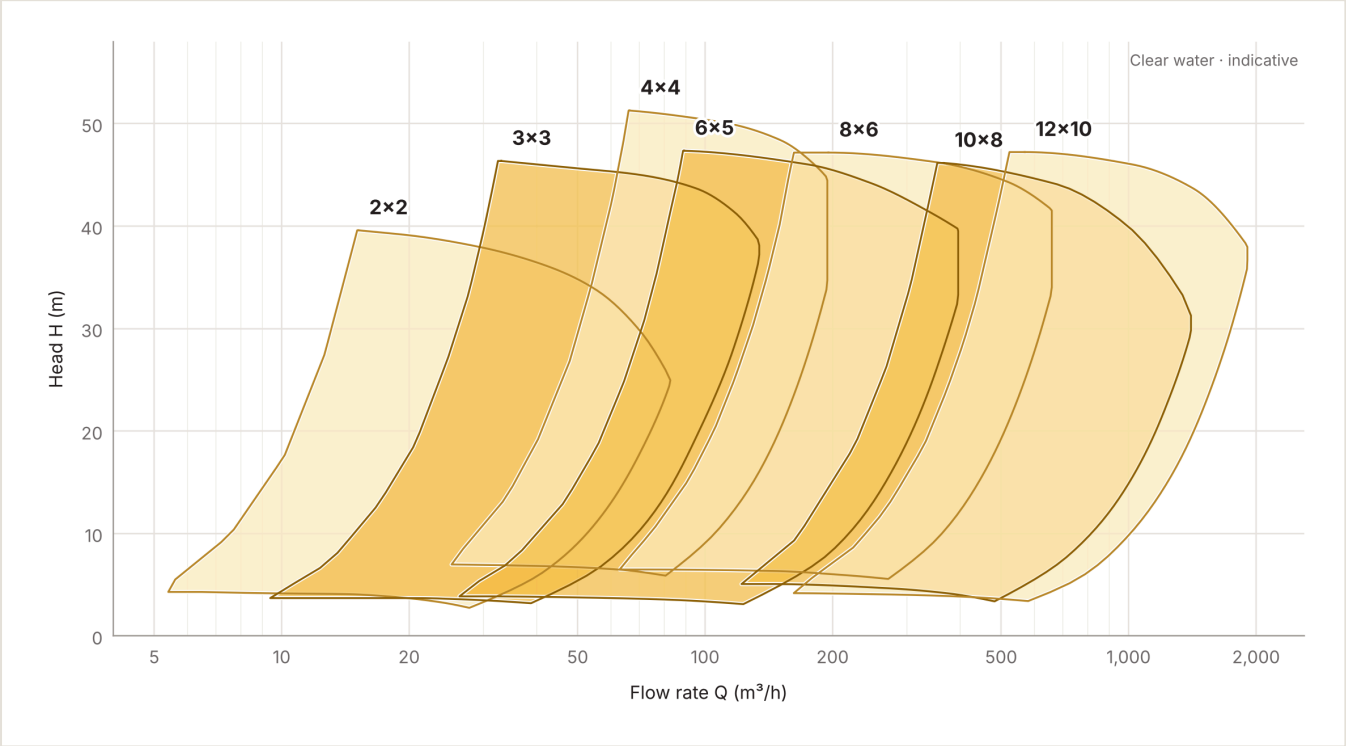

Indicative performance range on clear water. The 1.5×1.5 size is selected on request.

Size	Flow rate (m³/h)	Max. head (m)	Speed (rpm)
1.5×1.5	On request	On request	On request
2×2	5 – 83	41	800 – 2,400
3×3	9 – 134	46	600 – 2,100
4×4	25 – 194	51	600 – 1,600
6×5	26 – 396	48	400 – 1,400
8×6	61 – 659	47	450 – 1,200
10×8	112 – 1,404	46	400 – 1,200
12×10	162 – 1,908	47	270 – 900

What we need for a selection

- Flow rate and total head
- Solids: density, concentration and particle size
- Carrying liquid and temperature
- Pipe layout and suction conditions
- Your current pump type and size, if you replace a pump

Three gland types

The gland seals the shaft where it leaves the pump casing. Kinarox® Vita pumps come with a dry gland as standard. For duties where a dry gland is not suitable, such as pumps in series, we supply a gland with gland water.

Dry gland (D)

Standard · No gland water

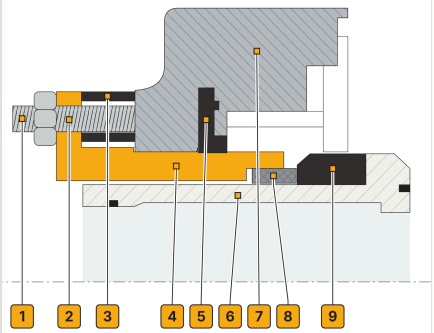

1. Adjusting stud and nut
2. Raised end of the adjusting sleeve
3. Rubber spacer washer on the stud
4. Adjusting sleeve
5. Gland seal
6. Shaft sleeve
7. Gland housing
8. Hard wearing face (stationary)
9. Rubber face seal (rotates with the shaft)

Hydrostatic gland (H)

On request · Clean gland water

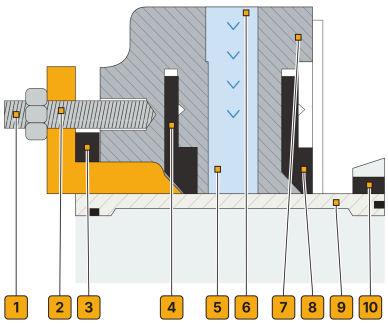

1. Adjusting stud and nut
2. Adjusting gland
3. Resilient gasket
4. Gland seal (bearing side)
5. Water chamber
6. Gland water feed (clean water)
7. Gland housing
8. Gland seal
9. Shaft sleeve
10. Axial expeller

Packed gland (P)

On request · Clean flushing water

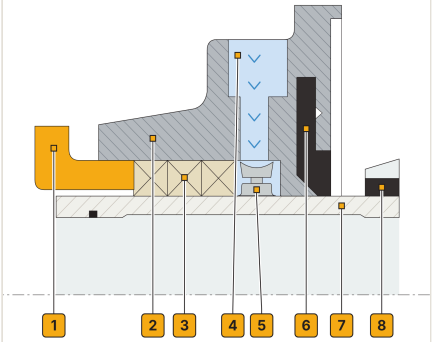

1. Adjusting gland
2. Gland housing
3. Packing rings
4. Flushing water or grease feed
5. Lantern ring
6. Gland seal
7. Shaft sleeve
8. Axial expeller

Schematic cross-section. Bearing side left, pump side right.

Gland housing · Adjusting parts · Rubber seals · Shaft sleeve · Hard wearing face · Packing · Gland water

	Dry gland (D)	Hydrostatic gland (H)	Packed gland (P)
Gland water	None	Clean water, approx. 0.2 bar above the discharge pressure	Clean flushing water, or a pressure-fed grease supply
Effect on the slurry	No dilution	Some dilution by gland water	Some dilution by flushing water
Adjustment	Adjust to a light drip while the pump runs; do not overtighten	Adjust while the pump runs	Adjust the packing while the pump runs
Best suited for	Single pumps, e.g. sand and gravel and separation plants	Pumps in series and booster duty	Sites with a clean water or grease supply
Not suited for	Pumps in series or booster duty: the sealing pressure becomes too high	Sites without a reliable clean water supply	Sites without a clean water or grease supply

Gland water for the hydrostatic gland

Size	2×2	3×3	4×4	6×5	8×6	10×8	12×10
l/s	0.04	0.05	0.07	0.07	0.09	0.10	0.20
m³/h	0.14	0.18	0.25	0.25	0.32	0.36	0.72

Use clean water only, never slurry. Gland life depends on how clean the gland water is. A higher pressure does not seal better; it only uses more water and dilutes the slurry.

General dimensions

Main dimensions per size, bare shaft pump. Dimensions in mm, mass in kg.

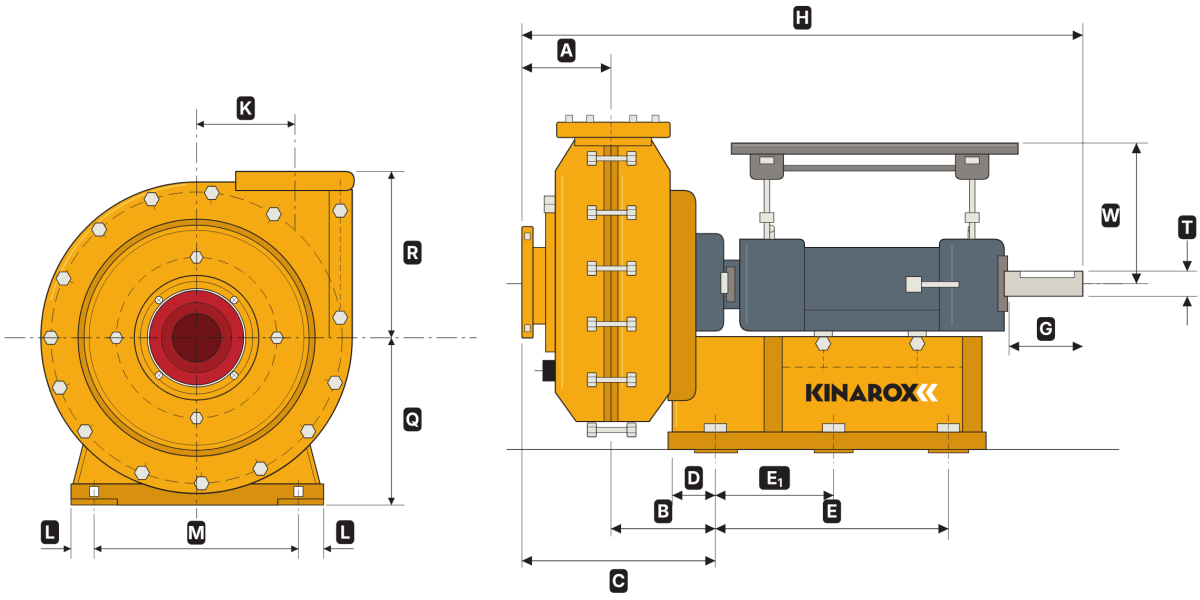

End elevation

Side elevation

Size	Mass	A	B	C	D	E	E_1	G	H	K	L	M	Q	R	T	W min	W max
1.5×1.5	142	87	137	224	49.5	310	–	70	725	111	20	285	250	216	40	165	220
2×2	156	92.5	132	224.5	49.5	310	–	70	725	120.5	20	285	250	241	40	165	220
3×3	326	120	180	300	65	355	–	120	915	168	30	360	300	295	45	250	310
4×4	440	132	169	301	57	460	–	127	998.5	184	30	400	336	324	60	272	372
6×5	608	211	234	445	100	479	–	189	1286	210	30	480	390	368	65	340	440
8×6	736	217.5	223	440.5	90	468	–	174	1312.5	222	35	490	428	394	70	345	445
10×8	1250	309	270	579	108	660	330	200	1600	321	40	660	550	406	90	430	585
12×10	1956	317.5	285	602.5	70	640	320	200	1697.5	368	40	750	600	483	100	–	–

W min and W max: motor platform height above the shaft centre line. Indicative dimensions; request a certified dimensional drawing for your installation.

Applications by industry

Typical duties for this rubber-lined pump design. Is your duty not listed? Send us the details and we advise on size, drive and shaft seal.

Industry	Classification and dewatering	Hydrocyclone feed	Dense medium	Mill circuits	Thickener feed and underflow	Flotation	Concentrates and tailings	Ash and residues	Effluent	Acid and chemical solutions	Silt and dredging
SAND, GRAVEL AND MINERALS											
Sand plants	✓	✓									
Metal ore mining		✓		✓			✓	✓			
China clay works		✓									
Glass works	✓								✓		
COAL AND ENERGY											
Coal preparation plants		✓	✓		✓				✓		
Power stations								✓			
PROCESS INDUSTRY											
Chemical works									✓	✓	
Cement manufacture				✓	✓	✓					
Steel works										✓	
Paper mills									✓		
WATER AND ENVIRONMENT											
Water treatment	✓										
Irrigation and dredging											✓
Vegetable washing	✓								✓		



Bearing assembly and dry gland side.

Eight sizes, wear parts from stock

Size codes give suction × discharge in inch. Up to 4×4 suction and discharge are equal; the larger sizes have a larger suction than discharge.

1.5×1.5 35/35 mm	**2×2** 50/50 mm	**3×3** 80/80 mm	**4×4** 100/100 mm
6×5 150/125 mm	**8×6** 200/150 mm	**10×8** 250/200 mm	**12×10** 300/250 mm





Natural-rubber impellers and liners in our warehouse in Lommel.

Wear and service parts

- Natural-rubber impellers
- Suction side and gland side liners
- Dry gland service kits
- Hydrostatic gland service kits
- Bearing assemblies
- Conversion kits, e.g. from dry gland to hydrostatic gland

The natural-rubber parts also fit Linatex® Mark 3 (IIIR) and Mark 2 (IIR) pumps. Send us the size or part number and we quote the matching part.

From inquiry to start-up

1 **Send us your current pump**

The type and size of your existing pump, or a photo of the nameplate, is enough to start.

2 **We confirm the fit**

We check that the Kinarox® Vita fits your existing connections and footprint.

3 **A fully specified quotation**

Tailored to your process: size, drive and shaft seal.

4 **Delivery and start-up**

We deliver the pump, as bare shaft or with motor and drive, and help you start up.

Switching without risk

Kinarox® Vita pumps are dimensionally interchangeable with Linatex® Mark 3 (IIIR) pumps. Your pipework and base stay as they are.

- ✓ **Same connections and footprint**
- ✓ **Interchangeable natural-rubber parts**
- ✓ **Advice on site before you decide**

Frequently asked questions

Does the dry gland need gland water?

No. The dry gland is a rubber face seal against a hard stationary face and runs without gland water.

Can I use a dry gland on pumps in series?

No. On pumps in series or booster duty the pressure at the gland becomes too high. Choose a hydrostatic or packed gland.

Do the rubber parts fit my Linatex® pump?

Yes. The natural-rubber parts are interchangeable with Linatex® Mark 3 (IIIR) and Mark 2 (IIR) parts.



Dry gland side, between the pump casing and the bearing assembly.

Parts and service from one partner

Parts from stock

Natural-rubber impellers, liners and gland service kits in Lommel, for fast delivery across Europe.

Advice on site

We look at your installation and duty before we propose a size, drive and shaft seal.

Workshop

We assemble pumps in our own workshop, as bare shaft or complete with motor and drive.



Kinarox® Vita 6×5 with motor, belt drive and belt guard.

Replacing a Linatex® pump?

Send us the size, the part number or a photo of the nameplate. You receive a fully specified quotation, tailored to your process.

Request a quotation | **Free on-site assessment**

PHONE
+32 493 05 02 66

E-MAIL
info@vaikon.com

WEB
www.vaikon.com/kinarox-vita-slurry-pumps

Vaikon BV · Balendijk 205 · 3920 Lommel · Belgium

Linatex® is a registered trademark of its owner. Vaikon is not affiliated with the trademark owner; brand names are used only to indicate compatibility.
Performance data are indicative and based on clear water. Specifications may change without notice.